OPW
FUEL MANAGEMENT SYSTEMS

SiteSentinel®

Tank Monitoring System

iTouch Controller Installation Manual

The material in this manual is subject to engineering changes and editorial revisions.
Copyright ©2007 OPW Fuel Management Systems ***Manual No. M1500***

OPW Fuel Management Systems
System and Replacement Parts Warranty Statement
Effective July 1, 2007

OPW Fuel Management Systems warrants that all OPW Tank Gauge and Petro Vend Fuel Control systems supplied by OPW Fuel Management Systems to the Original Purchaser will be free from defects in material and/or workmanship under normal use and service for a period of 12 months from the date of installation or 15 months from the date of shipment. Additionally, OPW Fuel Management Systems warrants that all upgrades and replacement parts (new and remanufactured) supplied by OPW Fuel Management Systems will be free from defects in material and workmanship under normal use and service for a period of 90 days from the date of installation or for the remainder of the system's original warranty, whichever is greater, as set forth in the first sentence of this statement. The foregoing warranties will not extend to goods subjected to misuse, neglect, accident, or improper installation or maintenance or which have been altered or repaired by anyone other than OPW Fuel Management Systems or its authorized representative. The buyer's acceptance of delivery of the goods constitutes acceptance of the foregoing warranties and remedies, and all conditions and limitations thereof.

If a claim is made within the warranted time period that any equipment and/or remanufactured part is defective in material or workmanship under normal use and service, such equipment and/or remanufactured part shall be returned to OPW Fuel Management Systems, freight prepaid. If such equipment or remanufactured part is found by OPW Fuel Management Systems in its sole judgment, to be defective in material or workmanship under normal use and service, OPW Fuel Management Systems, shall, at its sole option, repair or replace such equipment and/or remanufactured part (excluding, in all instances, fuses, ink cartridges, batteries, other consumable items, etc.)

The warranties, as set forth above, are made expressly in lieu of all other warranties, either expressed or implied, including, without limitation, warranties of merchantability and fitness for any particular purpose and of all other obligations or liabilities on OPW Fuel Management Systems part. Further, OPW Fuel Management Systems neither assumes, nor authorizes any other person to assume for it, any other liability in connection with the sale of the systems, or any new/replacement part that has been subject to any damage from any act of nature or any force majeure.

The term "Original Purchaser" as used in these warranties shall be deemed to mean the authorized OPW Fuel Management Systems distributor to which the system or any new/replacement part was originally sold. These warranties may be assigned by the original purchaser to any of its customers who purchase any OPW Fuel Management Systems systems or new/replacement parts.

The sole liability of OPW Fuel Management Systems, for any breach of warranty, shall be as set forth above. OPW Fuel Management Systems does not warrant against damage caused by accident, abuse, faulty or improper installation or operation. In no event shall manufacturer's liability on any claim for damages arising out of the manufacture, sale, delivery or use of the goods exceed the original purchase price of the goods. In no event shall OPW Fuel Management Systems be liable for any direct, indirect, incidental or consequential damage or loss of product.

CONTENTS

List of Figures 9
Introduction 11
Safety 11
Fire and Explosion Hazard 11
Dangerous Voltages 11
Compliance 12
Precision Leak Test 12
Initial Inspection 12
Connect Internal Battery 12
Specifications 13
SiteSentinel iTouch Controller 13
Printer 14
Magnetostrictive Probe (Model 924B) 15
About the Probe 15
Probe Specifications 16
Probe Lengths/Installation Scenarios 17
Controller Installation 18
Choose a Mounting Location for the Controller and Printer 18
Mounting the Controller 18
Mounting the Optional Printer Bracket 20
Installing the Controller Power Supply Conduit 21
Wiring the Controller Power Supply 22
Preparing for Probe and Sensor Installation 25
Probe and Sensor Wiring 25
Compliance 25
Wire Type 25
Probe Wiring 25
Sensor Wiring 25
Wire Length 25
Wire Splices 25

Conduit 26
Seal-Offs 27
Preparing Your Tanks for Probes 29
Underground Tank Manholes 29
Precision Leak Test 30
Probe Placement 30
Product Float and Water Float Offsets 31
Offset Procedure 31
Float Offset Example 31
Calculating Tank Tilt and Offset Factor 32
Probes 33
Probe Floats 33
Product Level vs. Water Level 33
Water Float Weight Specification 33
Installing the Float(s) 33
Product Density & Chemical Compatibility 35
Determining Water Float Product Group 36
Part Numbers 37
Probes Wiring 37
Step-by-Step Procedure 38
Sensors 40
Before You Begin 40
30-3206 Interstitial Hydrocarbon Liquid/Water Sensor 40
Specifications 40
Installing the 30-3206 41
2nd IS Module Position - Water 43
30-3207 Hydrocarbon Liquid Sensor 44
About the 30-3207-06, -10, -15 44
Specifications 44
Installing the 30-3207-06, -10, or -15 45
Typical Hydrocarbon Liquid Sensor Installation 46
SiteSentinel iTouch Controller Setup for Hydrocarbon Liquid Sensor 46

Testing and Decontaminating the Hydrocarbon Liquid Sensor....47
When working in the hazardous area use caution to avoid a hazardous situation....47
30-3210-06, -10, -15 Hydrocarbon Liquid/Water Sensor....48
Specifications....48
Installing the 30-3210-06, -15, -20....49
Typical Hydrocarbon Liquid/Water Sensor Installation....50
SiteSentinel iTouch Controller Setup for Hydrocarbon Liquid/Water Sensor....50
Testing the Sensor....51
30-3219-12 Hydrocarbon Liquid Sump Sensor....52
Specifications....52
Installing the 30-3219-12....53
Typical Hydrocarbon Liquid Sump Sensor Installation....54
SiteSentinel iTouch Controller Setup for Hydrocarbon Liquid Sump Sensor....54
Testing and Decontaminating the Hydrocarbon Liquid Sump Sensor....55
30-3221-1 Single-Level Sump Sensor About the 30-3221-1....56
Specifications....56
Installing the 30-3221-1....57
Connections....57
Typical Single-Level Sump Sensor Installation....58
SiteSentinel iTouch Controller Setup for Single-Level Sump Sensor....58
30-3221-2 Dual-Level Reservoir Sensor....60
Specifications....60
Installing the 30-3221-2....61
Connections....61
Typical Dual-Level Reservoir Sensor Installation....62
Testing the Dual-Level Reservoir Sensor Float....63
30-3221-1A, -1B Interstitial Level Sensors....64
Specifications....64
Installing the 30-3221-1A, -1B....65
Connections....65
Typical Interstitial Level Sensor Installation....66
Testing the Float Sensor....67

30-3222 Hydrocarbon Vapor Sensor About Part #30-3222 68
Specifications 68
Installing the 30-3222 69
Connections 69
Typical Hydrocarbon Vapor Sensor Installation 70
SiteSentinel iTouch Controller Setup for Hydrocarbon Vapor Sensor 70
Testing and Decontaminating the Hydrocarbon Vapor Sensor 71
30-3223 Interstitial Optical Liquid Sensor 72
Specifications 72
Installing the 30-3223 73
Connections 73
Typical Interstitial Optical Liquid Sensor Installation 74
Figure 25: Interstitial Optical Liquid Sensor Installation 74
Controller Setup for Interstitial Optical Liquid Sensor 74
Testing the Interstitial Optical Liquid Sensor 75
30-3224 Combo Single Level/ Hydrocarbon Liquid Sump Sensor 76
Specifications 76
Installing the 30-3224 77
Connections 77
Controller Setup for Combo Single-Level/Hydrocarbon Sump Sensor 78
Testing the Float Sensor Portion of the Combo Sensor 79
Testing and Decontaminating the Hydrocarbon Sensor Portion of the Combo Sensor 80
30-3225 Combo Dual Level/ Hydrocarbon Liquid Sump Sensor 81
Specifications 81
Installing the 30-3225 82
Note 82
Note 83
Controller Setup for 30-3225 84
Testing the Float Sensor Portion of the Combo Sensor 85
Testing and Decontaminating the Hydrocarbon Portion of the Combo Sensor 86
Testing the Water Sensor Portion of the Combo Sensor 86
External Device Connection 87

RJ-45 Communication Ports 88
Terminal Block Detail 89
Printer Option 90
Modem Connections 91
CAP Connection for SiteConnect Software 92
POS Interface Option 92
Built-in TCP/IP Connections 92
Appendix A – LCD Screen Icons 93
Alarm Kit Part Numbers 94
Installation 94
Alarm Kit Connections 95
Appendix C – POS Interface 96
SiteSentinel iTouch POS Port 96
SiteSentinel iTouch POS port. 97
Appendix D - Upgrading SiteSentinel iTouch Software Via SiteConnect 98
Appendix E – OM4 Output Module Option 100
Codes 101
Hazardous Area Definition 101
OM4 Output Module Specifications 101
Installing the OM41 101
Appendix F - LPG Probe Option 104
Installing the LPG Probe 106
Appendix G – Probe Comparison 109
Model 924 and 924B Magnetostrictive Probe 109
Probe Comparison 109
Ordering the New Probe 110
Probe Installation 111
Appendix H - Hardware for SiteSentinel iTouch Controller Main Board 113
Hardware Overview 113
Hardware Detail 115
Status Indicators 116
Dip Switch 116

Appendix I - EPA Certifications.....117

List of Figures

Figure 1: 924B Probe....15
Figure 2: Probe in Manhole-Equipped Tank....17
Figure 3: Probe in Tank With No Manhole....17
Figure 4: Mounting Footprint....19
Figure 5: Printer Backet Mounting Dimension....20
Figure 6: Controller Conduit Knockouts....21
Figure 7: SiteSentinel iTouch Ground Lugs....23
Figure 8: SiteSentinel iTouch External Surge Protector (75-0104)....24
Figure 9: SiteSentinel iTouch External Surge Protector I/O Port Connection (75-0104)....24
Figure 10: Creating a Seal-Off....27
Figure 11: Underground Tank Preparation....29
Figure 12: Probe Placement in Tank....30
Figure 13: Calculating Tank Tilt....32
Figure 14: Probe Component Locator....34
Figure 15: Determining Water Level Indicator Type....36
Figure 16: Probe Connections – TWO Conductor Shielded Cable....38
Figure 17:Interstitial (IS) Hydrocarbon Liquid/Water Sensor Installation....42
Figure 18: Hydrocarbon Liquid Sensor Installation....46
Figure 19: Hydrocarbon Liquid & Water Sensor Installation....50
Figure 20: Hydrocarbon Liquid Sump Sensor Installation....54
Figure 21: Single-Level Sump Sensor Installation....58
Figure 22: Dual-Level Sump Sensor Installation....62
Figure 23: Interstitial Level Sensor Installation....66
Figure 24: Hydrocarbon Vapor Sensor Installation....70
Figure 25: Interstitial Optical Liquid Sensor Installation....74
Figure 26: Combo Single-Level & Hydrocarbon Liquid Sensor Installation....78
Figure 27: Combo Dual-Level & Hydrocarbon Liquid Sensor Installation....83
Figure 30: Connecting External Devices to the Controller....87
Figure 31: Dip Switch for Modem Settings....87
Figure 32: SiteSentinel iTouch RJ-45 Communication Ports....88
Figure 33: SiteSentinel iTouch Terminal Block Connections....89
Figure 34: LCD Screen Icons....93
Figure 35: External Alarm Wiring....95
Figure 36: Pinout for POS-to-SiteSentinel iTouch Cable....97
Figure 39: OM4 Output Module Wiring....103

Figure 41: What's Supplied in the 30-1510 Kit....104
Figure 42: What's Supplied in the 30-1511 Kit....105
Figure 43: 30-1512 Head Cover Kit Contents....105
Figure 44: Probe Assembly and Installation Overview....106
Figure 45: 924 vs. 924B probe head....111
Figure 46: Top stabilizer....111
Figure 47: Top clip....112
Figure 48: Lower stabilizer and clip....112
Figure 49: SS1 Board (0322)....113
Figure 50: Communication Ports....115
Figure 51: Power Supply....115
Figure 52: Status Indicators....116
Figure 53: DIP Switch....116

Introduction

This manual describes the installation procedures for the SiteSentinel iTouch Integrated Monitoring System. Included in this manual are installation instructions for the Controller, probes, and sensors.

Warnings

Safety

When working in an environment containing fuel and fuel vapors, there is ALWAYS a risk of fire and explosion.

TO AVOID SEVERE INJURY OR DEATH, KEEP ALL POSSIBLE IGNITION SOURCES AWAY FROM HAZARDOUS AREAS.

Fire and Explosion Hazard

DISCONNECT POWER BEFORE INSTALLING. DO NOT install this equipment in a volatile, combustible or explosive atmosphere (the “hazardous area” defined in the National Electrical Code).

Dangerous Voltages

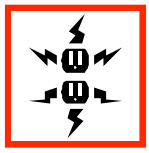

Certain components have DANGEROUS voltages even with the power cord disconnected.

Many of the procedures described in the following pages must be followed for each tank that is to be included in the system. Please read the directions carefully before proceeding.

WARNING

Improper installation may endanger installers and users of this equipment! Read these instructions CAREFULLY.

Installers must know the requirements of intrinsically safe devices, and must strictly obey instructions in this manual to perform a safe installation.

Compliance

Installation must comply with the National Electrical Code (NFPA No.70) and the Automotive and Marine Service Station Code (NFPA No. 30A).

Follow all of your local or regional codes as well.

WARNING

A fuel tank is a hazardous area as defined in the NEC. Do not mount any part of the system, or any external devices (other than probes or sensors) within or above the hazardous area.

Precision Leak Test

A precision leak test should be performed on each tank – especially older ones - before installing the SiteSentinel iTouch. This test makes sure that leak data generated by the system is accurate and reliable. A pressurized precision leak test can be done on a tank after the probe has been installed, but DO NOT let the pressure exceed **20 psi.**

Initial Inspection

The packing list contains details about your system. It is packed in the box with this manual. Store this sheet in a secure location. Be sure to check the packaging carefully for any damage that might have occurred during shipping.

Connect Internal Battery

For shipping, the internal battery in the Controller is disconnected.
To activate the internal battery, remove the yellow strips.

Specifications

Note

"I.S." (Intrinsically Safe) Interface Module refers to the sealed "terminal strip" inside the Controller. "I.S. Interface Module Position" refers to one (1) set of three (3) screw terminals on this terminal strip (for power, signal and ground connections). Each I.S. Interface Module contains four "positions."

SiteSentinel iTouch Controller

Physical dimensions:	Height: 23.5 cm (9-1/4 inch.) Width: 31.1 cm (12-1/4 inch.) Depth: 13.3 cm (5-1/4 inch.)
Power Input:	100-250 VAC, 50/60 HZ, 1.0 A
Operating Temperature Range:	0° – 40° C. (32° – 104° F)
Remote Alarm Output:	Contact Rated at 30 VAC/DC 2A
Probe and Sensor Capacity:	16 probes and/or sensors.
I.S. Interface Module:	14.5 VDC, 220 mA, 6.4 uF, 6 mH
Optional Output Module OM4	See page 100

Warnings

- **MOUNT THE CONTROLLER AND PRINTER OUTSIDE THE HAZARDOUS AREA!**
- **Substituting components will impair intrinsic safety.**
- **For connection to intrinsically safe devices used in:**
  - EEx ia IIA T4 (IEC/CENELEC).
  - Class 1, Division 1, Group D (North America) hazardous locations.
- **For use ONLY with equipment specified in these installation instructions.**

Printer

A thermal printer, the Seiko Model DPU-414, is available for reports and other printouts. See Figure 5 on page 20 for mounting instructions.

Physical dimensions:	Height: 17.8 cm (7 inch.)
	Width: 17.8 cm (7 inch.)
	Depth: 7.6 cm (3 inch.)
Power Input:	Provided by Controller.
Operating Temperature Range:	0° – 40° C. (32° – 104° F)

Magnetostrictive Probe (Model 924B)

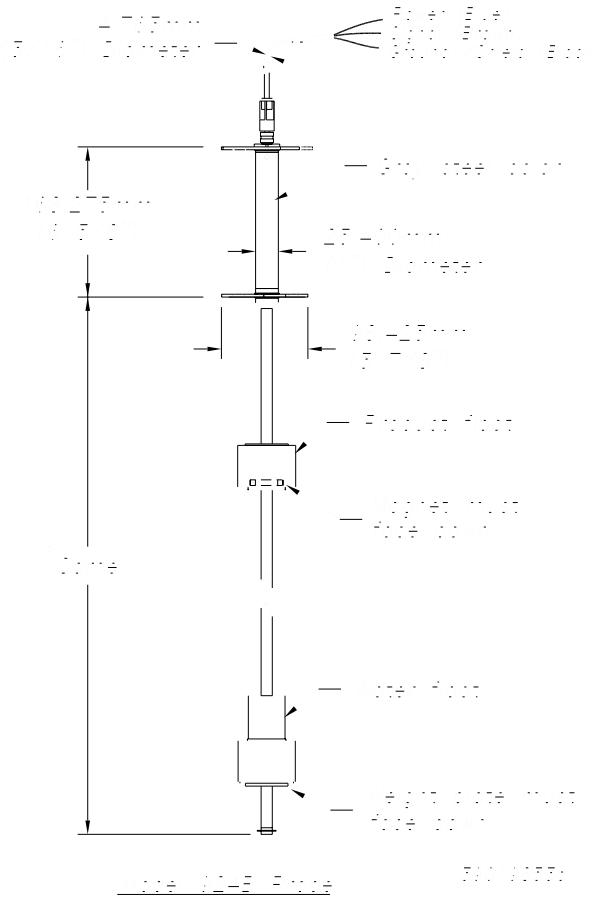

Figure 1: 924B Probe

About the Probe

The 924B probe uses magnetostrictive principles to derive product and water levels, and product temperatures. These probes are primarily used in under-ground storage tanks for both inventory and leak detection.

Two floats can be fitted to the probe shaft: The upper (product) float sits on top of the product, and the lower (water) float sits on the product/water boundary at the bottom of the tank.

Five temperature sensors reside in the probe shaft for measuring product temperature. They are located at positions of approximately 10%, 20%, 40%, 60%, and 80% of the tank volume (based upon a cylindrical tank). The sensors compensate for the expansion and contraction of the product with temperature and thus producing net corrected product volume.

Probe Specifications

Operating Temp. Range	–40 ℃ to +60 ℃ (–40 ℉ to +140 ℉)
Head dimensions	With connector, 21.5 cm x 2.54 cm (8.5 inch x 1 inch)
Cable	1.83 m (6 ft) of gas & oil resistant cable.
Sensor power	Must be provided by OPW Fuel Management Systems' I.S. Interface Module
Certifications	North America: Class 1, Division 1, Group D. Outside North America: EEx ia IIA T4
Level Resolution	0.0127 mm (0.0005")
Temp. Sensor Resolution	Less than +/– 0.3 ° C or 0.5 ° F.

Note

A probe for LPG tanks is also available. See Appendix F – LPG Probe Option on page 104.

Probe Lengths/Installation Scenarios

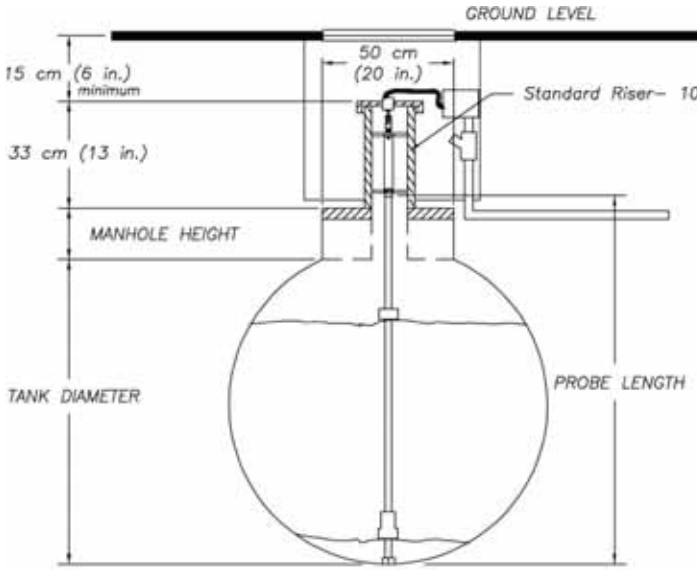

LEVEL 1 PROBE LENGTH		
PART NUMBER	PROBE LENGTH	
30–B053	135 cm	53 in.
30–B069	175 cm	69 in.
30–B077	196 cm	77 in.
30–B089	226 cm	89 in.
30–B101	257 cm	101 in.
30–B105	267 cm	105 in.
30–B113	287 cm	113 in.
30–B125	317 cm	125 in.
30–B137	348 cm	137 in.
30–B149	376 cm	149 in.

TANK DIAMETER + MANHOLE HEIGHT * + 8 cm (3 in.) Minimum= PROBE LENGTH

* (top of tank cover to top of manhole)

Figure 2: Probe in Manhole-Equipped Tank

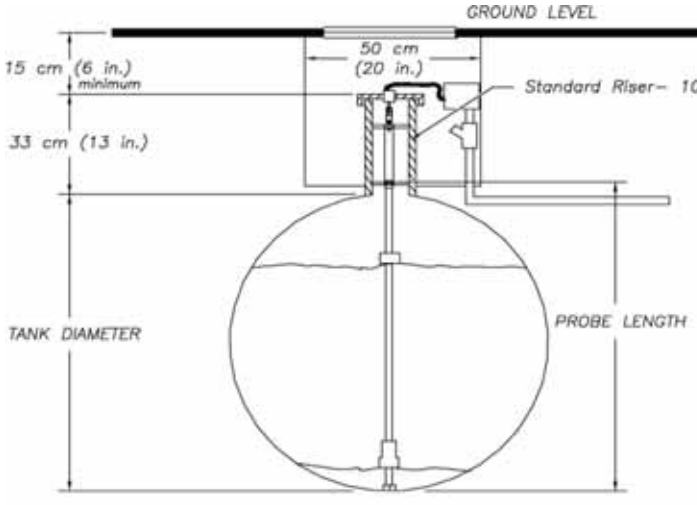

LEVEL 1 PROBE LENGTH		
PART NUMBER	PROBE LENGTH	
30–B053	135 cm	53 in.
30–B069	175 cm	69 in.
30–B077	196 cm	77 in.
30–B089	226 cm	89 in.
30–B101	257 cm	101 in.
30–B105	267 cm	105 in.
30–B113	287 cm	113 in.
30–B125	317 cm	125 in.
30–B137	348 cm	137 in.
30–B149	376 cm	149 in.

TANK DIAMETER + 8 cm (3 in.) Minimum= PROBE LENGTH

Figure 3: Probe in Tank With No Manhole

Controller Installation

Choose a Mounting Location for the Controller and Printer

Warning

Do not mount the Controller or external printer within or above the hazardous area.

Choose an indoor mounting location where it will be protected against moisture and extreme temperature and humidity conditions.
Wall mount the Controller at eye level close to a circuit breaker. Leave room above and below Controller for power, probe, sensor, remote alarm, and other conduits that must be connected to the Controller.
If purchased, also leave room for the optional printer that normally mounts to the left of the Controller.

Mounting the Controller

Mount the Controller to the wall using the dimensions shown in Figure 4 on page 19. The four mounting holes are 0.80 cm (0.3125 inch) diameter. Use as large a fastener as possible.

Warning

Do not drill holes in the SiteSentinel iTouch cabinet.

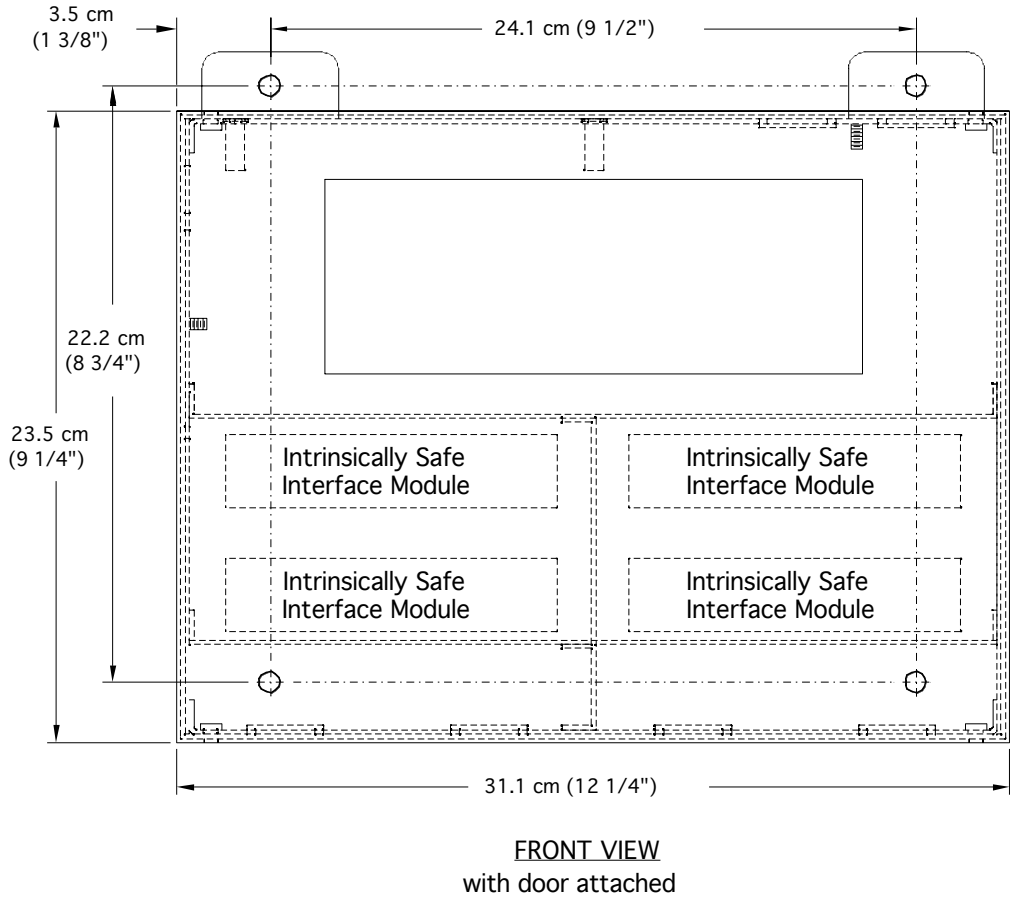

Figure 4: Mounting Footprint

Mounting the Optional Printer Bracket

Mount the printer bracket to the wall using Figure 5 below holes are 0.45 cm (0.177 inch). Use as large a fastener as possible, but ensure that the fastener does not protrude past the recess in the bracket.

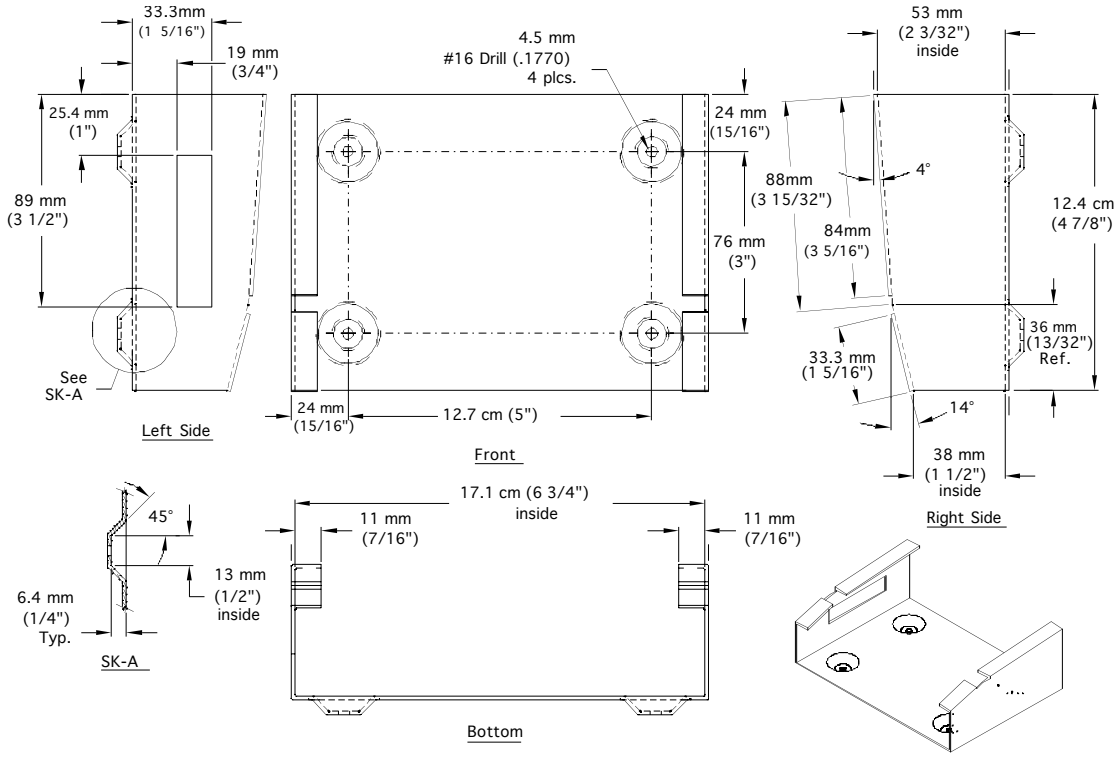

Figure 5: Printer Backet Mounting Dimension

Installing the Controller Power Supply Conduit

A local circuit breaker/disconnect device must be installed close to the Controller. Run conduit from this local breaker back to the main site distribution panel. Install 13 mm (0.5 inch) rigid steel conduit from the local circuit breaker panel to the top right Controller knockout Figure 6 below.

Note

The left knockout is reserved for optional external alarm wiring.

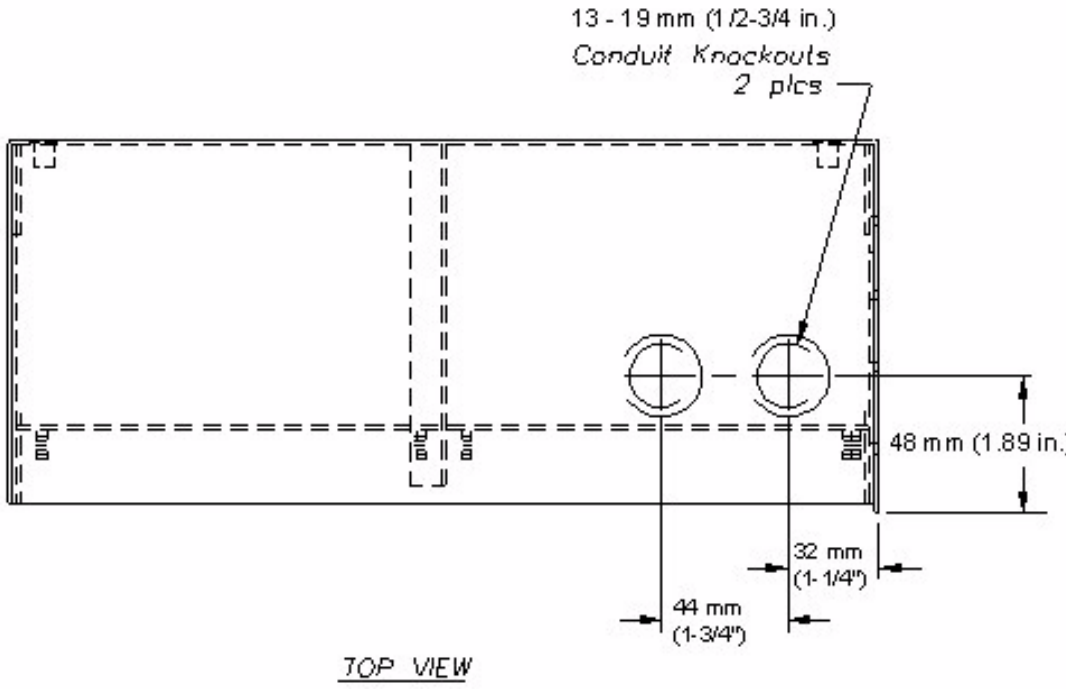

Figure 6: Controller Conduit Knockouts

Warning

Do not connect the Controller to equipment that exceeds the maximum ratings of voltage and current as specified in Specifications on page 13. Probe cables and sensors wiring must not share conduit with any other wiring.

Wiring the Controller Power Supply

Note

The power supply automatically adjusts for supply voltages from 100 to 250 VAC.

1. Pull two #14 AC power wires and one #12 AWG ground wire through the conduit from the distribution panel to the local breaker dedicated to the Controller.
2. Pull two #14 AC power wires and one #12 AWG ground wire through the conduit from the local breaker to the Controller.
3. Just enough wire through the bushing to attach to the 3-pin green terminal block located on right of the Controller circuit board.
4. Connect AC neutral and AC hot wires (order not important) to pins 1 and 3 of the green terminal block. Center pin is not used. Attach the cover to the terminal block.
5. Attach the ground wire to one of the ground terminal studs (near the top knockouts marked as ground) and run back to the main distribution panel for connection.

Note

- **The ground wire must be #12 AWG or larger.**
- **Some Countries/States require a redundant ground wire; this should be attached to the second ground terminal stud and run back to the main distribution panel for connection.**
- **Power wiring must enter the Controller via the designated power conduit knockout.**
- **Connect the power wires to a dedicated circuit.**

See Specifications on page 13 for power requirements.

- **Protecting communication ports and ensuring site intrinsic safety for the SiteSentinel iTouch**

Proper grounding of the SiteSentinel iTouch is essential for protecting the communication ports and lessens the risks of hazardous situations occurring when power surges or lightning strikes happen. This document outlines the recommended practices for a safe and damage-free installation.

- **Grounding the SiteSentinel iTouch Tank Gauging System**

There are two ground lugs within the SiteSentinel iTouch (See Figure 7 below). You will need to install two continuous ground wires (green 12 AWG or larger) from both ground lugs connected back to the distribution panel ground. The intrinsic barriers rely on these ground connections; if they are not present the barriers will not work. The redundant ground ensures that the SiteSentinel iTouch will operate properly and safety.

Figure 7: SiteSentinel iTouch Ground Lugs

- **SiteSentinel iTouch port protection**

The communication ports can be damaged by ground faults within the SiteSentinel iTouch.
If you are communicating from another type of system, such as a point-of-sale (POS) system, to the SiteSentinel iTouch and there is a slightly ground potential difference, this difference will either cause immediate failure of the SiteSentinel iTouch, or will cause a failure over time. To eliminate this possible damage, make sure the other equipment is grounded back to the same ground potential as the SiteSentinel iTouch at the distribution panel. In addition, a 12 AWG or larger wire can be run from the ground lug in the SiteSentinel iTouch to the ground of the other equipment.

OPW Fuel Management Systems can supply an external surge suppressor *(Part No. 75-0104*), see Figure 8 on page 24. This device will help protect the ports from power surges or lightning strikes.

Figure 8: SiteSentinel iTouch External Surge Protector (75-0104)

To install, simply insert the surge protector in series between the incoming communication lines and the I/O port of the SiteSentinel iTouch (See Figure 9 below). The surge protector ground wire must be connected to the metal chassis of the SiteSentinel iTouch or to the ground lug within the SiteSentinel iTouch. Each port requires one surge protector.

Figure 9: SiteSentinel iTouch External Surge Protector I/O Port Connection (75-0104)

If you have any questions regarding this bulletin, please contact the OPW Fuel Management Technical Support Department at (708) 485-4200 or by e-mail at info@opwfms.com.

Preparing for Probe and Sensor Installation

Probe and Sensor Wiring

Compliance

Installation of this equipment must be in accordance with all Local, State and Federal regulations pertaining to this type of equipment including, but not limited to, the National Electrical Code, NFPA No. 70 and the Automotive and Marine Service Station Code, NFPA No. 30A.

Wire Type

All wiring should have a capacitance rating of less than 100 picofarads per foot.

Probe Wiring

Gas and oil resistant shielded, 2-conductor cable is required to extend the probe cable to the I.S. Interface Module in the Controller. OPW Fuel Management Systems recommends you use Belden #88760 or Alpha #55371 cable. (Belden #88760 is available directly from OPW Fuel Management Systems; part number 12-1300).

Sensor Wiring

You can use the same cable as used for the probe or you can use individual Gas and Oil resistant cable, providing it is 18 AWG or greater.

Wire Length

Wire runs must be less than 300 meters (1,000 feet) to meet intrinsic safety standards. Also, wire lengths of 300 meters (1,000 feet) or more between probe/sensor and the Controller will jeopardize signal integrity and system operations.

Wire Splices

There should be no splices between the field junction box and the I.S. Interface Module in the SiteSentinel iTouch Controller. A splice in the hazardous area requires the use of a silicon-filled wire nut that must be located in a waterproof junction box. Each splice could jeopardize signal integrity and system operations.

Conduit

All probe and sensor cabling to the SiteSentinel iTouch Controller must be in rigid steel conduit. The conduit must be dedicated to intrinsically safe wiring for this Controller.

Probe and Sensor wiring for this Controller can share the same conduit.

This Controller's intrinsically safe wiring cannot share the same conduit with another equipment's intrinsically safe wiring.

Note

PVC conduit may be substituted for rigid steel conduit where acceptable by local codes. Use SHIELDED cable for sensor and probe wiring as described in the above sections.

The size and number of probe and sensor conduits (probe- sensor- to-Controller) depends on how many probes and sensor your site has.

See Table 1 below. Try to group probe wires into separate conduits for each SiteSentinel iTouch Controller I.S. Interface Module position.

NUMBER of PROBES	NUMBER & SIZE of CONDUIT
1 to 2	one 13 mm (½-inch)
3 to 4	one 19 mm (¾-inch)
5 to 6	one 13 mm (½-inch) and one 19 mm (¾-inch)
7 to 8	two 19 mm (¾-inch)
9 to 12	three 19 mm (¾-inch)
13 to 16	four 19 mm (¾-inch)

Table 1: Probe Quantity vs. Conduit Capacity

Seal-Offs

Seal off probe and sensor cables at both ends of the conduit run (Figure 10 below). Seal-offs prevent explosive vapors from entering the Controller or the building. Remove enough of the outer wire jacket to allow approximately three inches of wire leads to extend past each seal off.

Warning

DO NOT nick the wire insulation.

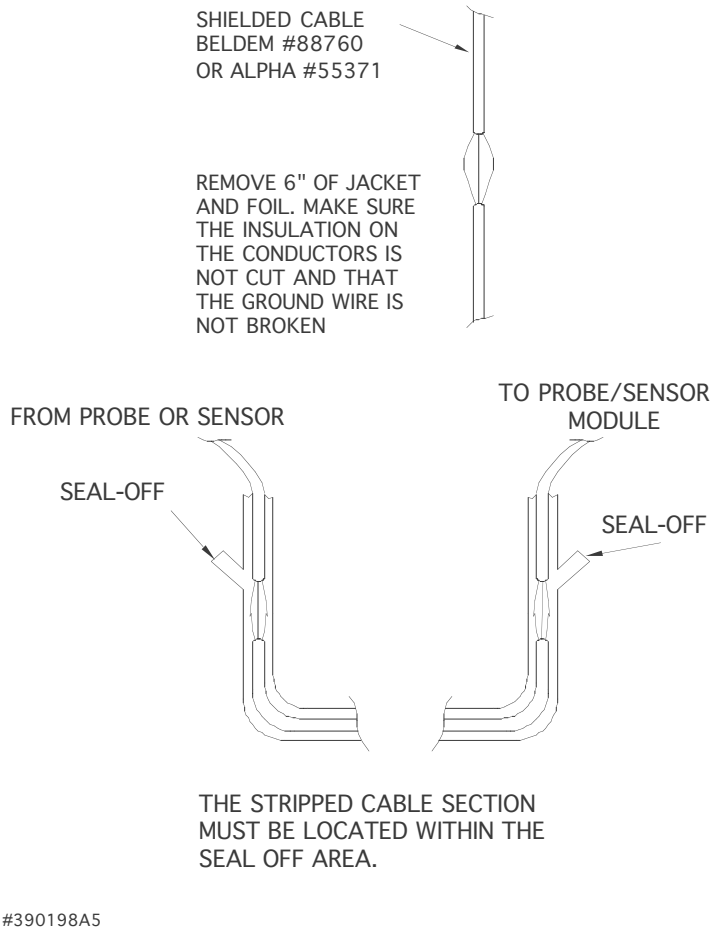

Figure 10: Creating a Seal-Off

Junction Boxes

Weatherproof electrical junction boxes with a gasket-equipped cover are required at the end of each probe and conduit run at the UST manhole or monitoring well location.

Wires coming off a probe or sensor connect to prepared Belden or Alpha cable, and then go through NPT bushing into the weatherproof junction box. Bushings must be used in all junction boxes. The cable is then routed out of the junction box via rigid steel conduit.

Preparing Your Tanks for Probes

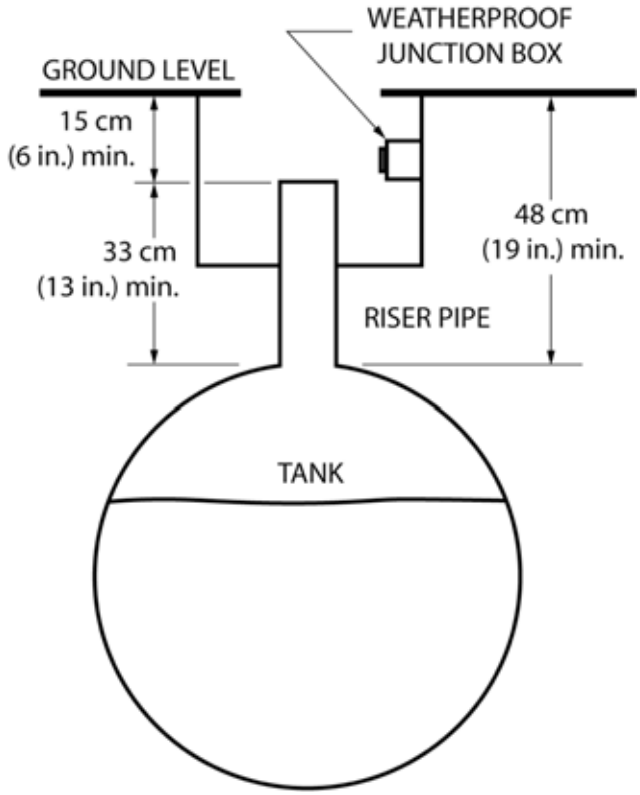

Figure 11: Underground Tank Preparation

Underground Tank Manholes

1. Excavate a 50 cm (20-inch) minimum diameter manhole around an unused fitting in the top of the tank. The hole must be big enough for a weatherproof junction box. If this fitting is not in the center of the tank, you must take additional measurements for probe compensation (read Product Float and Water Float Offsets on page 31).
2. Install a 7.5 cm - 10 cm (3 inch – 4 inch) diameter riser pipe in the fitting. This pipe must be long enough to accommodate the probe head, and it must be large enough to accommodate the probe floats. 5 cm and 10 cm (2 inch and 4 inch) floats are available.
3. Install a weatherproof junction box with 13 mm (0.5 inch) knockouts near the riser pipe. The junction box must be close to the riser to allow probe cable to reach.
4. Install a 13 mm (½-inch) bushing in the junction box.
5. Install an adapter collar onto the tank's riser pipe.

Use a riser cap with a suitable cable bushing installed. For older Model 924 and 613 probes, use a bushing with an inner diameter of 11 mm (7/16 inch). For next-generation 924, use bushings with an inner diameter of 5 mm (3/16 inch).

Precision Leak Test

Perform a precision leak test on each tank - especially older ones - before installing SiteSentinel iTouch. You can perform a pressurized leak test on a tank after probe installation; however, **DO NOT exceed 20 psi** pressure.

Probe Placement

Try to install the probe as close to the **center** of the tank (Figure 12 below) as possible. Locate the probe at least 91 cm (about 3 ft.) from the tank fill pipe. Adjust the drop tube of the fill pipe so that the product flow is diverted away from the probe.

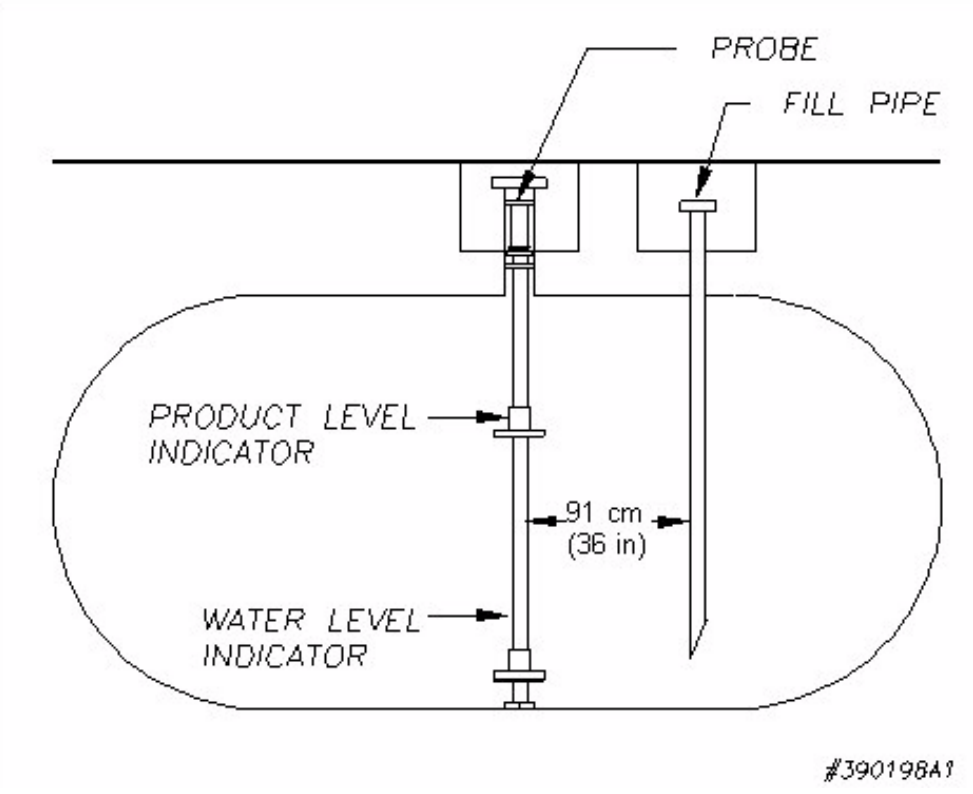

Figure 12: Probe Placement in Tank

Product Float and Water Float Offsets

The 924 probes differ slightly in setup from previous models of probe. This section tells you how to match your manual dipstick tank readings to the readings from the probe. Offset compensates for the angle (or slope) that the tank may have.

When performing subtractions, remember that subtracting a negative number is the same as adding the positive version of that number. For example, subtracting **–2** from **6** results in **8**.

Offset Procedure

An example appears below.

1. Run the SiteConnect software. Set both the **Product Float Offset** and the **Water Float Offset** held in the SiteSentinel iTouch Controller to 0 (zero).
2. Using your normal dipstick access point in the tank take a **Dipstick Product Level** and a **Dipstick Water Level**. To take the **Dipstick Water Level** use water detect paste on the bottom of the dipstick.
3. Take an inventory reading from the Controller. Note the **Probe Product Level** and the **Probe Water Level** .
4. Calculate **Product Float Offset** and **Water Float Offset**:
5. Product Float Offset = (Dipstick Product Level – Probe Product Level)
6. Water Float Offset = (Dipstick Water Level – Probe Water Level)
7. Run SiteConnect software and configure the SiteSentinel iTouch Controller with the new offset values obtained in the previous step.
8. Take an inventory reading from the Controller. The **Probe Product Level** should now match the **Dipstick Product Level** and the **Probe Water Level** should now match the **Dipstick Water Level.**

- A typical **Product Float Offset** is 7.4 cm (2.9 inches) and a typical **Water Float Offset** is 0 cm.

Float Offset Example

Sample DIPSTICK Levels

- **Product** = 59.5
- **Water** = 1.2.

Sample PROBE Levels

- **Product** = 56.6
- **Water** = 1.5

Using this data and this equation: **Dipstick Product Level – Probe Product Level =**

PRODUCT FLOAT OFFSET, the product offset value is 59.5 – 56.6, or 2.9
Using this data and this equation: **Dipstick Water Level – Probe Water Level = Water Float Offset**, the water offset value is 1.2 – 1.5, or –0.3.

Calculating Tank Tilt and Offset Factor

You can calculate a product offset for a probe that is not installed in the center of a "pitched" tank. Pitch is the tilt of a tank along its horizontal axis.
Some tanks are intentionally installed with one end lower than the other. This allows water and sediment to collect at the low end, while clear product is drawn from the high end. Pitch can also be caused by tank settling.
The rate of pitch can be measured by using a dipstick to measure the level of product at two points (preferably opposite ends) of the tank.
See Figure 13 below. The product depth at the deep (lower) end of the tank is value "A".
The product depth at the shallow (higher) is value "B". The distance between the two measuring points is "C".

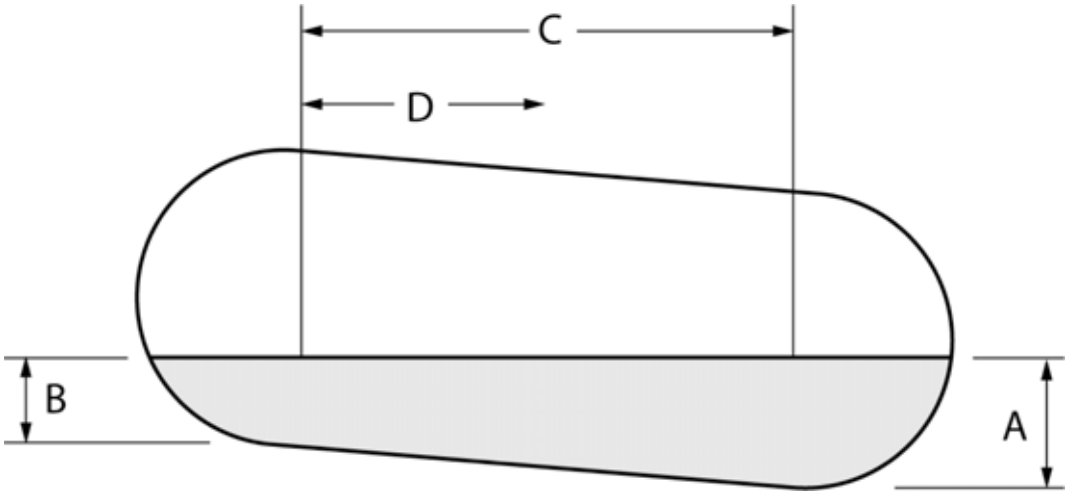

Figure 13: Calculating Tank Tilt

The formula for pitch is: **(A-B)/C**

For example: [(46" - 40")/120"] = (6/120) = 0.05

To calculate the product offset, measure value "D", the distance of the probe from *the center of the tank. The formula for product offset is "D" x pitch. For the example above, 36" x 0.05 = 1.8"*

If the probe is located closer to the shallow end of the tank, the product offset is positive; for the example, 1.8. If the probe is located closer to the deep end of the tank, the product offset is negative; for the example, 1.8.

See Site Connect's Help for details about entering the product offset.

Probes

This section covers gasoline and diesel probes – for information on the optional LPG (liquidfied petroleum gas) probe, see Appendix F – LPG Probe Option on page 104.

Probe Floats

The terms “float” and “level indicator” are completely interchangeable

Product Level vs. Water Level

Figure 14 on page 34 shows how the probe components work together.
The Product Level Indicator floats atop the gasoline or diesel fuel and registers the overall height of the fuel. You can use the Product Level Indicator with or without a Water Level Indicator.

The Water Level Indicator features one of two different ballast weights (color coded for gasoline or diesel – see Figure 15 on page 39). Because fuel products are less dense than water, the weight plate forces the Water Level Indicator to sink through the product and float on the water. Water height at the product/water boundary can thus be determined.

Water Float Weight Specification

If you ordered a Water Level Indicator the weight and fluid product group will be on a label affixed in the area below. Each weight is certified by a OPW Fuel Management Systems technician for use with its Water Level Indicator. The listed weight is the complete weight of the level indicator.

Installing the Float(s)

1. Review Figure 14 on page 34.
2. Remove the retaining ring from the probe shaft.
3. Install the level indicator(s) as shown.
4. Make sure the Water Level Indicator (if used) magnet faces UP.
5. Install probe end boot.
6. Make sure the Product Level Indicator magnet faces DOWN.
7. Replace the retaining ring through the slot in the probe end boot.

Caution

If the wrong type of water float is used, it may float to the top and register an unusually high water level, not register at all or sink too far and register an unusually low water level. If your product fluid density does not fit into one of these groups, contact the OPW Fuel Management Systems customer sales department for recommendations.

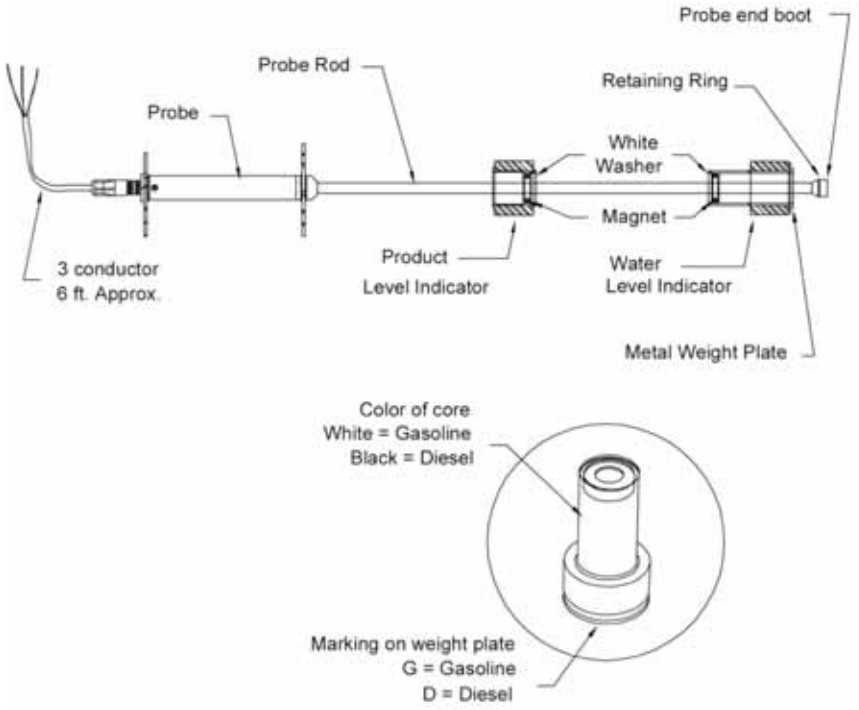

Figure 14: Probe Component Locator

Product Density & Chemical Compatibility

Product Group	Compatibility	API	Specific Gravity
Gasoline (white core)	Gasoline	45 < API < 78	0.68 <d<0.80
	Aviation gasoline		
	Regular unleaded		
	Regular leaded		
	Premium unleaded		
	Gasoline/Methanol blend, less than 5% methanol		
	Gasohol, less than 40% ethanol		

Table 2: Product Compatibility

Product Group	Compatibility	API	Specific Gravity
Diesel (black core)	Diesel	26 < API < 45	0.80 < d < 0.90
	Jet fuel		
	Kerosene		
	Motor oil		
	Toluene		
	Gear oil		
	Transmission oil		

Table 2: Product Compatibility (Continued)

Caution

If the float is used in a non-compatible fluid, swelling, cracking, and dissolving may occur, leading to failure. If your product is not chemically compatible with the floats, contact OPW Fuel Management Systems Customer Service for recommendations.

Determining Water Float Product Group

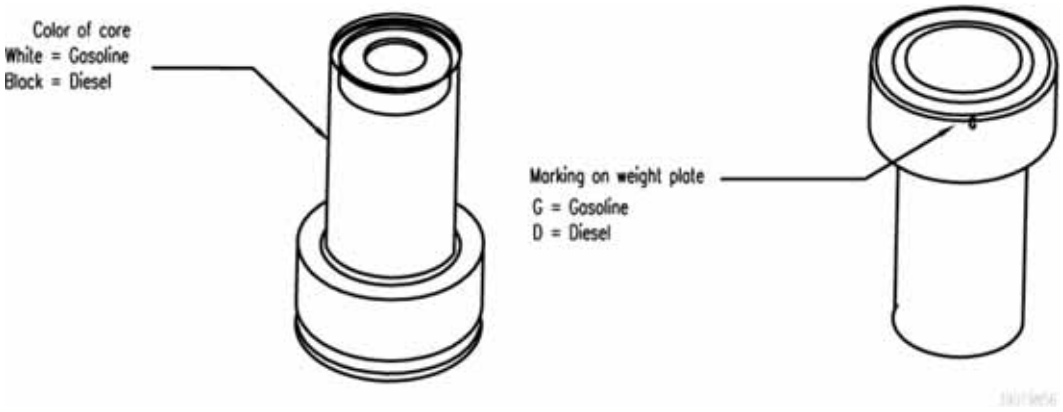

Figure 15: Determining Water Level Indicator Type

The Water Float/Level Indicator (Figure 15 above) features a ballast weight plate. This weight permits the level indicator to sink through the product, but to float on the water, thus registering the height of the water at the product/water boundary. The weight is certified by OPW Fuel Management Systems for use with one of two groups -- gasoline group OR diesel group. You can tell which product the Water Level Indicator is for by the color of the core (Figure 15). White cores are for gasoline, black cores are for diesel. There is also a mark on the ballast weight plate ("G" for gasoline, "D" for diesel).

Part Numbers

Item and part number	30-1508-01	30-1508-02	30-1508-03	30-1509-01	30-1509-02	30-1509-03
Product level indicator assembly 2-inch (30-0113)				X	X	X
Water level indicator assembly, 2-inch gas (30-0111)		X			X	
Water level indicator assembly 2-inch diesel (30-0112)	X			X		
Cable, 3 pole, 22 gauge, 6 ft., Yellow (10-1185)	X	X	X	X	X	X
Wire Nut silicon filled (10-5014)	X	X	X	X	X	X
Probe end boot (50-3092)	X	X	X	X	X	X

Probes Wiring

Warning

Probe conduit must be dedicated to intrinsically safe wiring.

Use Table 3 below and Figure 16 on page 38 (for two-conductor cable) or Table 4 below and (for three-conductor cable) to connect the probe to the Controller IS Interface Module terminal blocks.

See Figure 1 on page 15 for a probe drawing

I.S. Interface Module Terminal Position	Belden Cable	Probe Cable
+12 V	Red	Blue
(SIGNAL)	Black	Brown
(GROUND)	Shield	Black

Table 3: I.S. Interface Module Connections to Belden TWO-CONDUCTOR Cable with Shield

I.S. Interface Module Terminal Position	Belden Cable	Probe Cable
+12 V	Red	Blue
(SIGNAL)	Black	Brown
(GROUND)	Shield	Black

Table 4: I.S. Probe Connections to Belden THREE-CONDUCTOR Cable

Caution

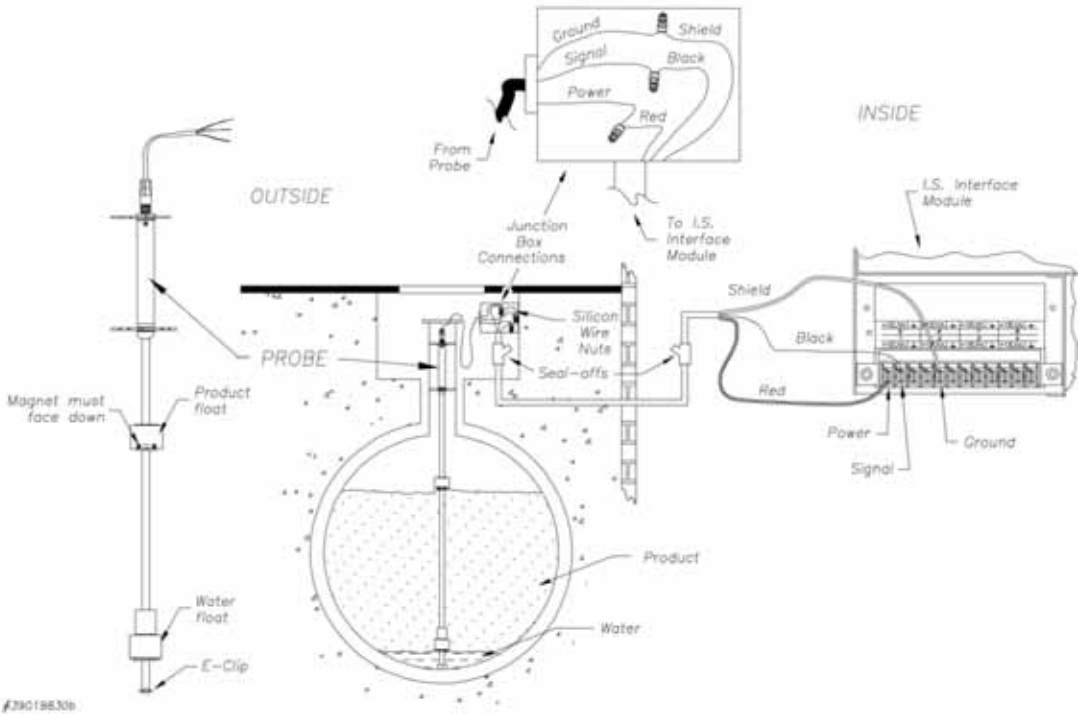

Figure 16: Probe Connections – TWO Conductor Shielded Cable

With 3-conductor cable, attach the shield from the cable ONLY TO THE CONTROLLER. Trim and tape the other end of the shield. Do NOT allow the shield to touch any of the probe wires OR the metal junction box.

Step-by-Step Procedure

1. Feed the yellow probe cable through the bushing in the riser cap.
2. Attach the cable connector to the socket in the probe head.
3. Carefully lower the probe into the riser pipe until it rests on the bottom of the tank. Be careful not to damage the floats.
4. Tighten the riser cap bushing, leaving enough cable to reach the junction box.
5. Snap the riser cap in place. Secure the cap with a lock.
6. Install a 13 mm (1/2-inch) NPT bushing into the junction box.

7. Pass the probe cable through this bushing into the box, and then tighten the bushing.
8. Pull the shielded cable through the rigid conduit and through the installed seal-offs at both ends of the conduit run. Leave slack in the probe wiring emerging from the ends.
9. Using the silicon-filled wire nuts included with the probe, connect the yellow probe cable to the shielded cable inside the electrical junction box:

TWO-CONDUCTOR CABLE

- Attach the BLACK probe wire to the braided SHIELD from the Belden cable.

THREE-CONDUCTOR CABLE

- Attach the BLACK probe wire to the GREEN wire from the Belden cable.
- Attach the BROWN probe wire to the BLACK wire in the Belden cable.
- Attach the BLUE probe wire to the RED wire in the Belden cable.

Note

10. Remove the clear plastic cover located over the I.S. Interface Modules inside the SiteSentinel iTouch Controller to attach the wiring from the probe conduit.
11. Connect the braided SHIELD from the Belden cable to the I.S. Module GROUND position.
12. Connect the BLACK wire to the I.S. Module SIGNAL position.
13. Connect the RED wire to the I.S. Module POWER position.

Note

When attaching probes to the Controller, start with I.S. Module Position "1" and work toward "16". Fill one strip before starting another.

Write down which probe goes to each position. You will need this when you configure the SiteSentinel iTouch using the SiteConnect software.

Sensors

Before You Begin

- See local and National Electrical Codes for your location.
- Ensure cabling (gas and oil resistant OPW Fuel Management Systems part number 12-1030) back to the Controller is in conduit that is dedicated to intrinsically safe wiring.

30-3206 Interstitial Hydrocarbon Liquid/Water Sensor

About the 30-3206

The interstitial hydrocarbon liquid/water sensor is designed for use in the interstitial area of a double-walled tank.

The hydrocarbon liquid/water sensor contains a carbon/polymer material that changes its resistance when exposed to liquid hydrocarbons, as well as a water sensor that relies on the conductivity of water to detect its presence, providing the ability to discriminate between hydrocarbon liquid and water. In the event of a break in the cable, the system will activate the alarm.

Specifications

Operating Temperature	-20°C to +50°C (-4°F to 122°F)
Dimensions	2.5 cm (1.0 in) x 35 cm (13.8 in)
Cable	6.1 m (20 ft) of gas & oil resistant cable.
Nominal resistance (uncontaminated)	1K – 3K ohms
Nominal resistance (contaminated)	10K – 200K ohms

To ensure safe operating conditions the sensor has been designed to connect to OPW Fuel Management Systems systems only.

Installing the 30-3206

Caution

Hydrocarbons (gasoline, diesel and jet juel, etc.) float on water – if this sensor is fully submerged, the polymer will NOT detect hydrocarbon liquid.
This sensor requires TWO Controller Interface Module positions.

- Review Figure 17 on page 45. Use the supplied cable gland and silicone wire nuts.
- Install seal-offs at both ends of the conduit run.

Connections

I.S. Interface Module Position 1 Terminals	**Sensor Wire**
+12	Red
	Black (hydrocarbon)
	No connection
I.S. Interface Module Position 2 Terminals	
+12	No connection
	White (water)
	No connection

Table 5: Interstitial Hydrocarbon Liquid/Water Sensor Wiring

Typical Interstitial Hydrocarbon Liquid/Water Sensor Installation

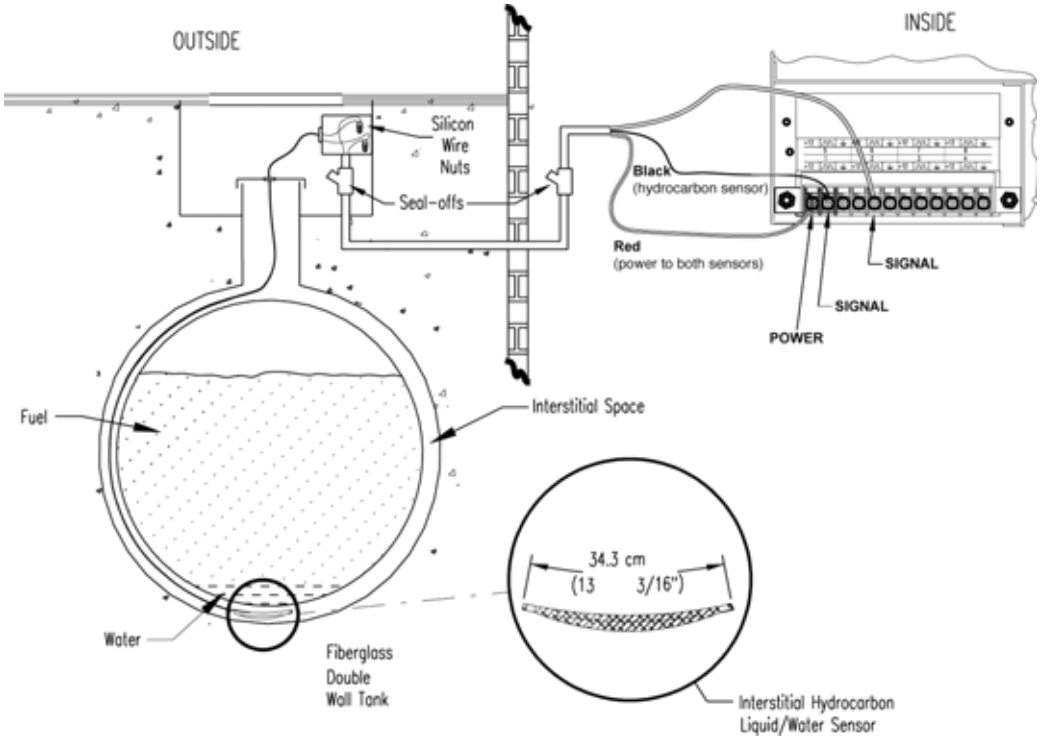

Figure 17:Interstitial (IS) Hydrocarbon Liquid/Water Sensor Installation

SiteSentinel iTouch Controller Setup for Interstitial (“IS”) Hydrocarbon Liquid/Water Sensor

1st IS Module Position - Hydrocarbon Liquid

1. Configure the barrier position to be a genericsensor (or if using SiteConnect choose the appropriate icon) and install that position.
2. Using the Controller, take a dynamic reading of the hydrocarbon poertion of the sensor.
3. Set the **lower** alarm threshold to be 0.5 volts lower than thereading taken (this assumes that there is no current hydrocarbon contamination).

SiteConnect will ask to adjust the lower threshold automatically, to 0.1 V below the current voltage reading. Answer YES**.**

4. Set the **upper** alarm threshold to 5.0 volts (disables upper threshold).
5. Program the alarms associated with the lower threshold that you wish to activate if the sensor detects hydrocarbon liquid.

2nd IS Module Position - Water

1. Configure the barrier position to be a generic sensor (or if using SiteConnect choose the appropriate icon) and install that position.
2. Set the upper alarm threshold to 0.5 volts.
3. Set the lower alarm threshold to 0 volts (disables lower threshold).
4. Program the alarms associated with the upper threshold that you wish to activate if the sensor detects water.

Testing and Decontaminating the Interstitial Hydrocarbon Liquid/Water Sensor

Warning

When working in the hazardous area use caution to avoid a hazardous situation.

When testing or decontaminating the sensor, work in a well-ventilated area with no hot surfaces or open flames. If the SiteSentinel iTouch Controller fails to detect alarm conditions simulated here, also check that your Controller thresholds are correct.

- **Testing the Hydrocarbon Liquid Sensor Portion.** Immerse the polymer in mineral spirits for about 10 minutes. Remove the sensor and let it hang to air dry. After another 10 minutes any Controller alarms or events associated with the hydrocarbon sensor should trigger. Disconnect this portion of the sensor from the Controller -- an alarm should result. Short across these Controller positions -- an alarm should also occur. If the open lead and/or short lead test fail, check all wiring and junction boxes for continuity.
- **Testing the Water Sensor Portion.** Testing the Water Sensor Portion. Immerse just the end of the sensor in tap water. Controller alarms or events associated with the water portion of the sensor should trigger. Short the water portion of the sensor -- an alarm should occur. If the short lead test fails, check all wiring and junction boxes for continuity.
- **Cleaning the Hydrocarbon Sensor Portion.** To clean hydrocarbon contamination from the sensor from testing or actual use, immerse the contaminated portion in denatured alcohol for one hour. Then, flush the sensor with water to remove any residue. Leave the sensor to "settle" for another hour. The sensor should return to nearly its original resis-tance, but it may be necessary to readjust the Controller's thresholds.

30-3207 Hydrocarbon Liquid Sensor

About the 30-3207-06, -10, -15

The hydrocarbon liquid sensors are used primarily in monitoring wells with fluctuating ground water tables. The hydrocarbon liquid sensor contains a carbon/polymer material that changes its resistance when exposed to liquid hydrocarbons.

This sensor can also be placed in the containment areas of tanks, pumps and pipes. It will alert the system if any fuel enters into the containment area, which would indicate a leak. In the event of a break in the cable the system will activate the alarm

Specifications

Operating Temperature	-20°C to +50°C (-4°F to 122°F)
Dimensions (depends on part #)	1.8 cm (0.7 in) dia. x
	1.8-4.6 m (6-15 ft)
Cable	3.1 m (10 ft) gas & oil resistant cable.
Nominal resistance	
Uncontaminated	1K – 3K ohms per foot
Contaminated	30K – 200K ohms

To ensure safe operating conditions the sensor has been designed to connect to OPW Fuel Management Systems systems only.

Installing the 30-3207-06, -10, or -15

Caution

Hydrocarbons float on water -- if this sensor is fully submerged, the polymer will NOT detect hydrocarbon liquid.

This sensor requires ONE Controller Interface Module position.

- Review Figure 18 on page 49.
- Use Table 6 below to connect the sensor to the Controller I.S. Interface Module terminals.
- Use the supplied cable gland and silicon wire nuts.
- Install seal-offs at both ends of the conduit run

Connections

I.S. Interface Module Position Terminal	Sensor Wire
+12	Red
	Black
	White - No connection

Table 6: Hydrocarbon Liquid Sensor Wiring

Typical Hydrocarbon Liquid Sensor Installation

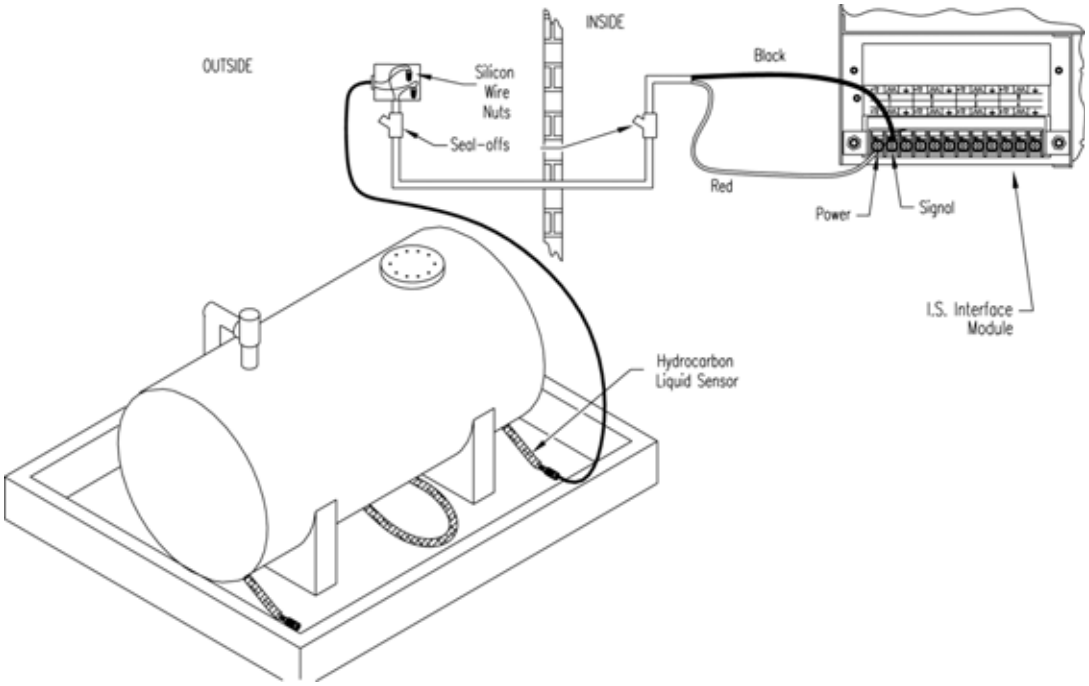

Figure 18: Hydrocarbon Liquid Sensor Installation

SiteSentinel iTouch Controller Setup for Hydrocarbon Liquid Sensor

1. Configure the barrier position to be a **generic** sensor (or if using SiteConnect choose the appropriate icon) and install that position.
2. Using the Controller, take a dynamic reading of the hydrocarbon portion of the sensor.
3. Set the **lower** alarm threshold to be 0.5 volts lower than the reading taken (this assumes that there is no current hydrocarbon contamination).

Note

SiteConnect will ask to adjust the lower threshold automatically, to 0.1 V below the current voltage reading. Answer YES.

4. Set the **upper** alarm threshold to be 5.0 volts (disables upper threshold).
5. Program the alarms associated with the lower threshold that you wish to activate if the sensor detects hydrocarbon liquid.

Testing and Decontaminating the Hydrocarbon Liquid Sensor

Warning

When working in the hazardous area use caution to avoid a hazardous situation.

When testing or decontaminating the sensor, work in a well-ventilated area with no hot surfaces or open flames.

If the SiteSentinel iTouch Controller fails to detect alarm conditions simulated here, also check that your Controller thresholds are correct.

- **Testing the Hydrocarbon Liquid Sensor**. Immerse the polymer in mineral spirits for about 10 minutes. Remove the sensor and let it hang to air dry. After another 10 minutes any Controller alarms or events associated with the hydrocarbon sensor should trigger. Disconnect this portion of the sensor from the Controller – an immediate alarm should result. Short across these Controller positions – an alarm should also occur. If the open lead and/or short lead test fail, check all wiring and junction boxes for continuity.
- **Cleaning the Hydrocarbon Liquid Sensor**. To clean hydrocarbon contamination from the sensor from testing or actual use, immerse the contaminated portion in denatured alcohol for one hour. Then, flush the sensor with water to remove any residue. Leave the sensor to "settle" for another hour. The sensor should return to nearly its original resistance, but it may be necessary to re-adjust the Controller's thresholds.

30-3210-06, -10, -15 Hydrocarbon Liquid/Water Sensor

About the 30-3210-nn

The hydrocarbon liquid/water sensor is used primarily in monitoring wells with fluctuating ground water tables or in containment areas of tanks, pumps and pipes.

The sensor contains a carbon/polymer material that changes its resistance when exposed to liquid hydrocarbons, as well as a water sensor that relies on the conductivity of water to detect its presence, providing the ability to discriminate between hydrocarbon liquid and water.

The sensor also alerts the system to the absence of ground water in a monitoring well or the presence of water in containment areas. It will alert the system if any fuel enters into the containment area, which would indicate a leak. In the event of a break in the cable the system will activate the alarm.

Specifications

Operating Temperature	–20 °C to +50 °C (–4 °F to +122 °F)
Dimensions (depends on part #)	1.8 cm (0.7 in) dia. x
	1.8-4.5 m (6-20 ft)
Cable	3.1 m (10 ft) gas & oil resistant
Nominal Polymer Resistance	
Uncontaminated	1K – 3K ohms per foot
Contaminated	30K – 200K ohms

To ensure safe operating conditions the sensor has been designed to connect to OPW Fuel Management Systems systems

Installing the 30-3210-06, -15, -20

This sensor requires TWO Controller Interface Module positions.

- Review Figure 19 on page 50.
- Use Table 7 below to connect the sensor to the Controller I.S. module.
- Use the supplied cable gland and silicon wire nuts.
- Install seal-offs at both ends of the conduit run.

Connections

I.S. Interface Module Position 1 Terminals	**Sensor Wire**
+12	Red
	Black (hydrocarbon)
	No connection
I.S. Interface Module Position 2 Terminals	**Sensor Wire**
+12	No connection
	White (water)
	No connection

Table 7: Hydrocarbon Liquid/Water Sensor Wiring

Typical Hydrocarbon Liquid/Water Sensor Installation

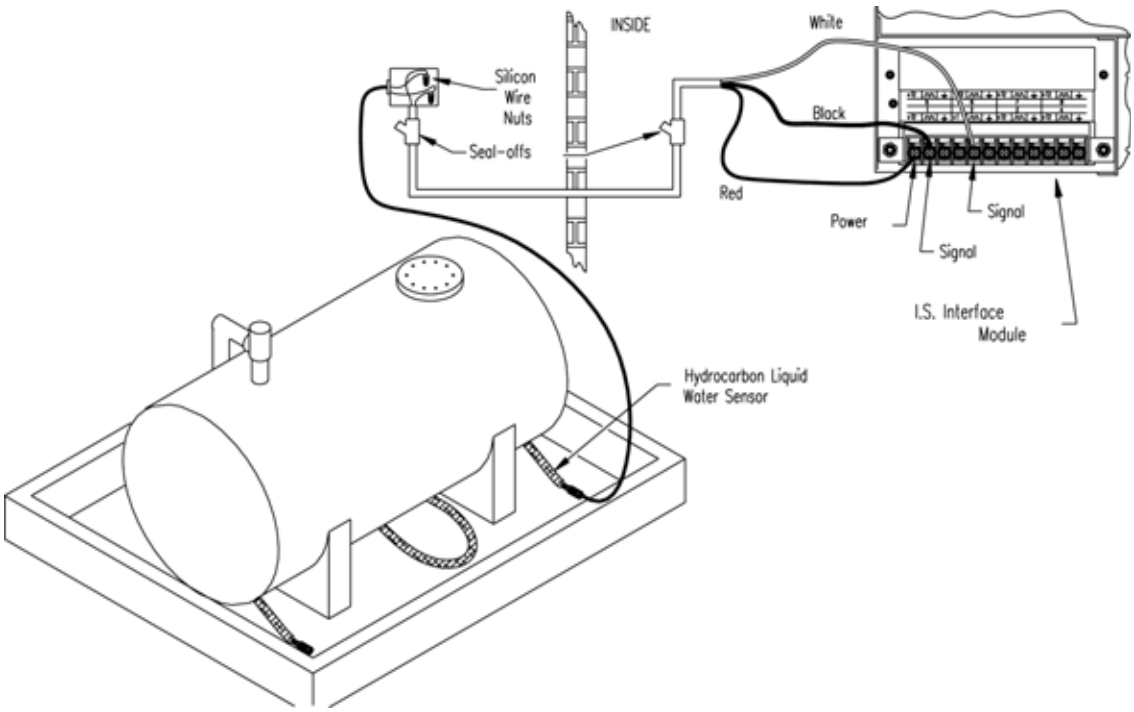

Figure 19: **Hydrocarbon Liquid & Water Sensor Installation**

SiteSentinel iTouch Controller Setup for Hydrocarbon Liquid/Water Sensor

Hydrocarbon Sensor Configuration

1. Configure the barrier position for the hydrocarbon sensor portion to be a **generic** sensor (or if using SiteConnect choose the appropriate icon) and install that position.
2. With the Controller, take a dynamic reading of the hydrocarbon portion of the sensor.
3. Set the lower alarm threshold to 0.5 volts lower than the reading you obtained in Step 2 (assumes no current hydrocarbon contamination).
4. Set the upper threshold to 5.0 volts (disables upper threshold).
5. Program the alarms associated with the lower threshold that will activate in the presence of liquid hydrocarbons.

Note

SiteConnect will ask to adjust the lower threshold automatically, to 0.1 V below the current voltage reading. Answer YES.

Water Sensor Configuration

1. Configure the barrier position for the water sensor portion to be a **generic** sensor (or if using SiteConnect choose the appropriate icon) and install that position.
2. Set the **upper** alarm threshold to 0.5 volts. Set the **lower** alarm threshold to 0.0 volts (disables lower threshold).

Testing the Sensor

Warning

When working in the hazardous area use caution to avoid a hazardous situation. When testing or decontaminating a hydrocarbon sensor, work in a well-ventilated area with no hot surfaces or open flames.

- **Testing and Cleaning the Hydrocarbon Sensor.** Immerse the polymer in mineral spirits for about 10 minutes. Remove the sensor and let it hang to air dry. After another 10 minutes any Controller alarms or events associated with the hydrocarbon sensor should trigger. Disconnect this portion of the sensor from the Controller – an immediate alarm should result. Short across these Controller positions – an alarm should also occur. If the open lead and/or short lead test fail, check all wiring and junction boxes for continuity.

  To clean hydrocarbon contamination from the sensor from testing or actual use, immerse the contaminated portion in denatured alcohol for one hour. Then, flush the sensor with water to remove any residue. Leave the sensor to “settle” for another hour. The sensor should return to nearly its original resistance, but it may be necessary to re-adjust the Controller’s thresholds.

- **Testing the Water Sensor.** Immerse just the end of the sensor in tap water. Controller alarms or events associated with the water portion of the sensor should trigger. Short the water portion of the sensor – an alarm should occur. If the short lead test fails, check all wiring and junction boxes for continuity.

30-3219-12 Hydrocarbon Liquid Sump Sensor

About the 30-3219-12

The hydrocarbon liquid sump sensor is designed to detect the presence of liquid hydrocarbons in sumps, dispenser pans and other locations where the presence of a hydrocarbon liquid could indicate that a leak has occurred.

The hydrocarbon liquid sensor contains a carbon/polymer material that changes its resistance when exposed to liquid hydrocarbons. In the event of a break in the cable, the system will activate the alarm.

Specifications

Operating Temperature	–20 °C to +50 °C (–4 °F to +122 °F)
Dimensions	4.4 cm (1.7 in) dia. x
	33.5 cm (13.2 in) long
Cable	3.6 m (12 ft) gas & oil resistant
Nominal Resistance	
Uncontaminated	1K – 5K ohms
Contaminated	30K – 200K ohms

To ensure safe operating conditions the sensor has been designed to connect to OPW Fuel Management Systems systems only.

Installing the 30-3219-12

Warning

Hydrocarbons float on water – if this sensor is fully submerged, the polymer will NOT detect hydrocarbon liquid.

This sensor requires ONE Controller Interface Module positions.

- Review Figure 20 on page 57.
- Use Table 8 below to connect the sensor to the Controller I.S. module.
- Use the supplied cable gland and silicon wire nuts.
- Install seal-offs at both ends of the conduit run.

Connections

I.S. Interface Module Position	Sensor Wire
+12	Red
	Black
	No connection

Table 8: Hydrocarbon Liquid Sump Sensor Wiring

Typical Hydrocarbon Liquid Sump Sensor Installation

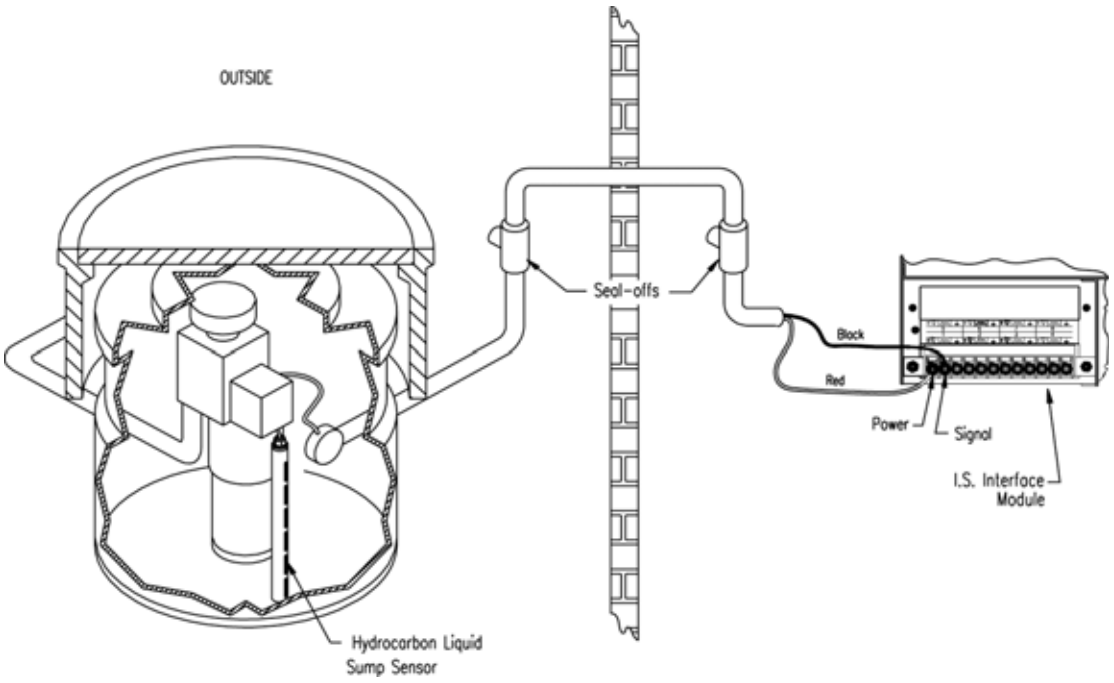

Figure 20: Hydrocarbon Liquid Sump Sensor Installation

SiteSentinel iTouch Controller Setup for Hydrocarbon Liquid Sump Sensor

1. Configure the barrier position to be a **generic** sensor (or if using SiteConnect choose the appropriate icon) and install that position.
2. Using the Controller, take a dynamic reading of the hydrocarbon portion of the sensor.
3. Set the **lower** alarm threshold to be 0.2 volts lower than the reading taken (this assumes that there is no current hydrocarbon contamination).

Note

SiteConnect will ask to adjust the lower threshold automatically, to 0.1 V below the current voltage reading. Answer YES.

4. Set the **upper** alarm threshold to be 5.0 volts (disables upper threshold).
5. Program the alarms associated with the lower threshold that you wish to activate if the sensor detects hydrocarbon liquid.

Testing and Decontaminating the Hydrocarbon Liquid Sump Sensor

Warning

When working in the hazardous area use caution to avoid a hazardous situation.

When testing or decontaminating the sensor, work in a well-ventilated area with no hot surfaces or open flames.

If the SiteSentinel iTouchSiteSentinel iTouch Controller fails to detect alarm conditions simulated here, also check that your Controller thresholds are correct.

- **Testing the Hydrocarbon Liquid Sump Sensor**. Immerse the polymer in mineral spirits for about 10 minutes. Remove the sensor and let it hang to air dry. After another 10 minutes any Controller alarms or events associated with the hydrocarbon sensor should trigger. Disconnect this portion of the sensor from the Controller -- an immediate alarm should result. Short across these Controller positions -- an alarm should also occur. If the open lead and/or short lead test fail, check all wiring and junction boxes for continuity.
- **Cleaning the Hydrocarbon Liquid Sump Sensor**. To clean hydrocarbon contamination from the sensor from testing or actual use, immerse the contaminated portion in denatured alcohol for one hour. Then, flush the sensor with water to remove any residue. Leave the sensor to "settle" for another hour. The sensor should return to nearly its original resistance, but it may be necessary to re-adjust the Controller's thresholds.

30-3221-1 Single-Level Sump Sensor

About the 30-3221-1

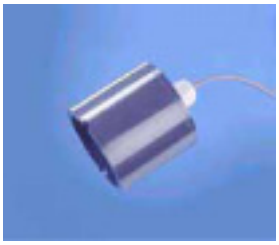

The single-level sump sensor is designed to detect the presence of liquid in sumps, dispenser pans and other locations where the presence of a liquid could indicate that a leak has occurred.

This sensor can also be used to monitor wet wells to ensure that a liquid is normally present. The sensor contains a float switch that activates in the presence of liquid. In the event of a break in the cable, the system will activate the alarm.

Specifications

Operating Temperature	–20 °C to +50 °C (–4 °F to +122 °F)
Dimensions	7.4 cm (2.9 in) dia.x
	9.5 cm (3.7 in) long
Cable	4.6 m (15 ft) gas & oil resistant

To ensure safe operating conditions the sensor has been designed to connect to OPW Fuel Management Systems systems only.

Installing the 30-3221-1

Note

If monitoring a normally dry well, use a meter to orient the float so the sensor is in the closed state with NO liquid present (float in lower position). If monitoring a normally wet well, use a meter to orient the float so that it is in the closed state WITH liquid present (float in upper position).

This sensor requires ONE Interface Module position.

- Review Figure 21 on page 61.
- Use Table 9 below to connect the sensor to the Controller I.S. Interface Module terminals.
- Use the supplied cable gland and silicon wire nuts.
- Install seal-offs at both ends of the conduit run

Connections

I.S. Interface Module Position	Sensor Wire
+12	Red
	Black
	No connection

Table 10: Single-Level Sump Sensor Wiring

Typical Single-Level Sump Sensor Installation

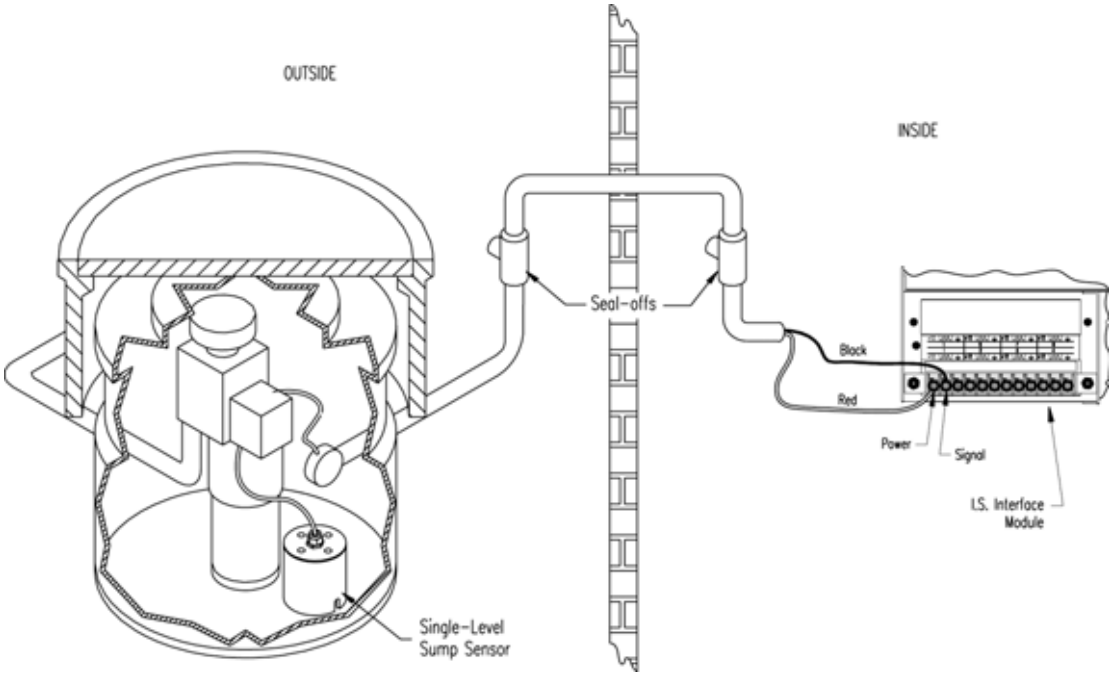

Figure 21: Single-Level Sump Sensor Installation

SiteSentinel iTouch Controller Setup for Single-Level Sump Sensor

1. Configure the barrier position to be a **generic** sensor (or if using Site-Connect choose the appropriate icon) and install that position.
2. Set the **lower** alarm threshold to 2.5 volts set the **upper** alarm threshold to 5.0 volts (disables upper threshold).

3. Program the alarms associated with the lower threshold that you wish to the lower threshold that you wish to activate if the sensor detects hydrocarbon liquid.

Testing the Single-Level Sump Sensor Float

Warning

When working in the hazardous area use caution to avoid a hazardous situation.

When testing the sensor, work in a well-ventilated area with no hot surfaces or open flames.

If Sensor Installed in a Normally DRY Well

- Place the float in the UPPER position – this should trigger an alarm in the Controller.
- Return the float to the LOWER position – the alarm should end.

If Sensor Installed in a Normally WET Well

- Place the float in the LOWER position – this should trigger an alarm in the Controller.
- Return the float to the UPPER position – the alarm should end.

If the Controller fails to register the alarm condition, check your programmed thresholds in the Controller. Check the orientation of the float as described on page 57. Disconnecting the sensor should trigger a alarm and shorting the sensor should be out of alarm. Check all wiring and junction boxes to ensuring continuity without shorts.

30-3221-2 Dual-Level Reservoir Sensor

About 30-3221-2

The dual-level reservoir sensor is designed for use in the brine-filled reservoir of the interstitial area of a doubled-walled tank. This sensor contains a dual-level float switch that detects level changes of fluid in the reservoir of the tank. The sensor expects the liquid to be at a constant level. The system will activate the alarm when the brine level in the interstitial space either rises or falls.

It can also be used in other areas (such as dispenser containment pans) that are normally dry and will give a low level warning followed by a high level alarm. In the event of a break in the cable, the system will activate the alarm.

Specifications

Operating Temperature	–20 °C to +50 °C (–4 °F to +122 °F)
Dimensions	6 cm (2.4 in) dia. x
	35.6 cm (14 in) long
Cable	4.5 m (15 ft) gas & oil resistant

To ensure safe operating conditions the sensor has been designed to connect to OPW Fuel Management Systems systems only.

Installing the 30-3221-2

Note

The logic for this sensor can be changed, by simply flipping the lower float. To remove the lower float, use needle-nose pliers to remove the bottom clip. Then, remove the plastic cover and the float clip, followed by the float itself.

If you are monitoring a normally wet well (brine filled reservoir), orient the float with the CLOSED arrow pointing downward.

If you are monitoring a normally dry well, make sure to orient the float with the CLOSED arrow pointing upward.

This sensor requires ONE Interface Module position.

- Review Figure 22 on page 65.
- Use Table 10 below to connect the sensor to the Controller I.S. Interface Module terminals.
- Use the supplied cable gland and silicon wire nuts.
- Install seal-offs at both ends of the conduit run

Connections

I.S. Interface Module Position Terminal	Sensor Wire
+12	Red
	White
	No connection

Table 10: Dual-Level Reservoir Sensor Connections

Typical Dual-Level Reservoir Sensor Installation

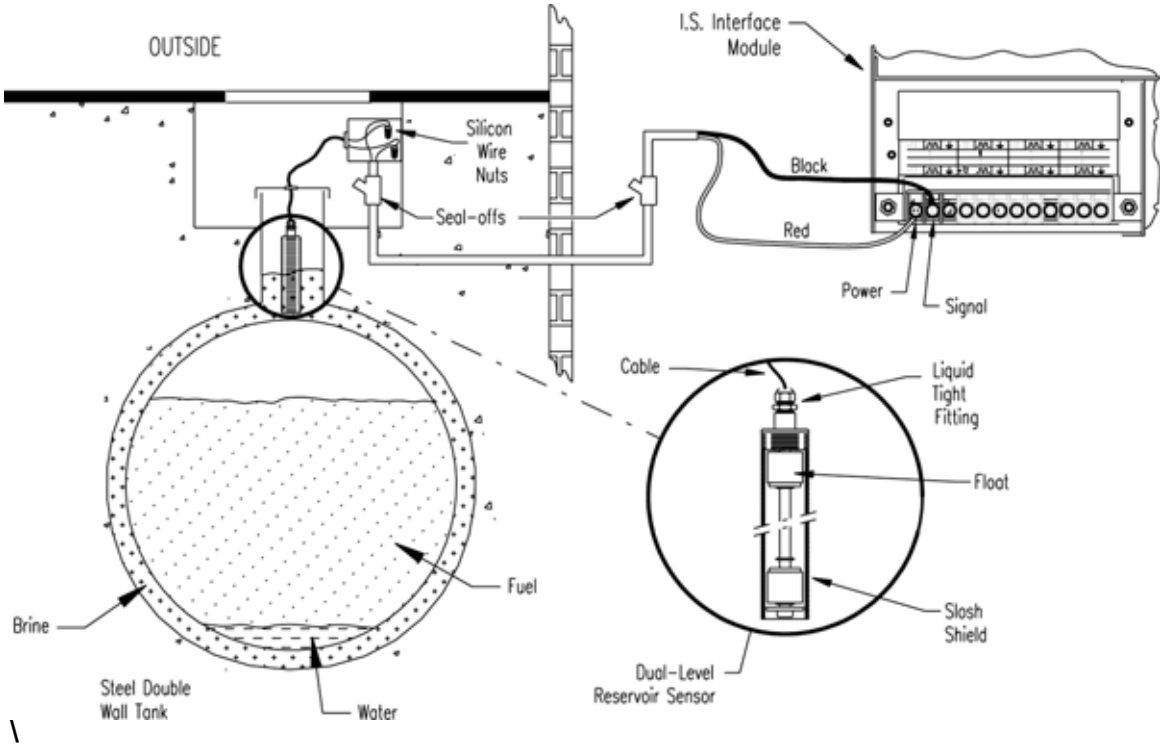

\

Figure 22: Dual-Level Sump Sensor Installation

SiteSentinel iTouch Controller Setup for Dual-Level Reservoir Sensor

1. Configure the barrier position to be a **generic** sensor (or if using Site-Connect choose the appropriate icon) and install that position.
2. Set the **lower** alarm threshold to 2.2 volts. Set the **upper** alarm thresh-old to 3.4 volts
    - If monitoring a **normally wet well** the 3.4-volt threshold means liquid is too low. The 2.2-volt threshold means liquid is too high.
    - If monitoring a **normally dry well**, the 3.4-volt threshold is where liquid is above the lower float. The 2.2-volt threshold is where liquid is above the upper float.
3. Program the alarms associated with the thresholds you wish to activate if the sensor detects liquid.

Testing the Dual-Level Reservoir Sensor Float

Warning

When working in the hazardous area use caution to avoid a hazardous situation.

When testing the sensor, work in a well-ventilated area with no hot surfaces or open flames.

If Sensor Installed in a Normally DRY Well

- Place the LOWER float in its UPPER position and the UPPER float in its LOWER position. This should trigger a low-level alarm in the Controller.
- Place the LOWER float in its UPPER position and the UPPER float in its UPPER position. This should trigger a high-level alarm in the Controller.
- Return BOTH floats to their LOWER positions and check that the Controller is no longer in the alarm state.

If Sensor Installed in a Normally WET Well

- Place the LOWER float in its LOWER position and the UPPER float in its LOWER position. This should trigger a low-level alarm in the Controller.
- Place the LOWER float in its UPPER position and the upper float in its UPPER position. This should trigger a high-level alarm in the Controller.
- Place the LOWER float in its UPPER position and the upper float in its LOWER position. Confirm that the Controller is no longer in an alarmed state.

If the Controller fails to register the alarm condition, check your programmed thresholds in the Controller.

Check the orientation of the lower float as described on page 60

Disconnecting the sensor should trigger a high-level alarm. Shorting the sensor should generate a low-level alarm. Check all wiring and junction boxes to ensuring continuity without shorts.

30-3221-1A, -1B Interstitial Level Sensors

About the 30-3221-1A, 1B

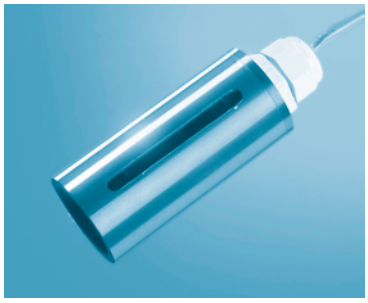

Part # 30-3221-1A

Part # 30-3221-1B

The two types of interstitial level sensor are used primarily in the interstitial area of a double walled tank. The sensorcontains a float switch that activates in the presence of a liquid. The **30-3221-1A** is constructed from chemical resistant non-metallic material and the **30-3221-1B** is constructed from brass.

It can also be used in sumps, dispenser pans and other locations where the presence of a liquid could indicate that a leak has occurred. In combination with a vapor sensor, this sensor can be used to monitor wet wells to ensure that a liquid is normally present. In the event of a break in the cable the sys-tem will activate the alarm.

Specifications

Operating Temperature	–20 °C to +50 °C (–4 °F to +122 °F)
Dimensions 30-3221-1A	3.4 cm (1.3 in) dia.x
	10 cm (3.9 in) long
Dimensions 30-3221-1B	3.5 cm (1.4 in) dia.x
	9.0 cm (3.5 in) long
Cable	4.5 m (15 ft) gas & oil resistant

To ensure safe operating conditions the sensor has been designed to connect to OPW Fuel Management Systems systems only.

Installing the 30-3221-1A, -1B

Note

If monitoring a normally drywell, use a meter to orient the float so the sensor is in the closed state with NO liquid present (float inlower position). If monitoring a normally wetwell, use a meter to orient the float so that it is in the closed state WITH liquid present (float in upper position).

This sensor requires ONE Interface Module position.

- Review Figure 23 on page 66.
- Use Table 11 below to connect the sensor to the Controller I.S. Interface Module terminals.
- Use the supplied cable gland and silicone wire nuts.
- Install seal-offs at both ends of the conduit run.

Connections

I.S. Interface Module Position	Sensor Wire
+12	Red
	Black
	No connection

Table 11: Interstitial Level Sensor Wiring

Typical Interstitial Level Sensor Installation

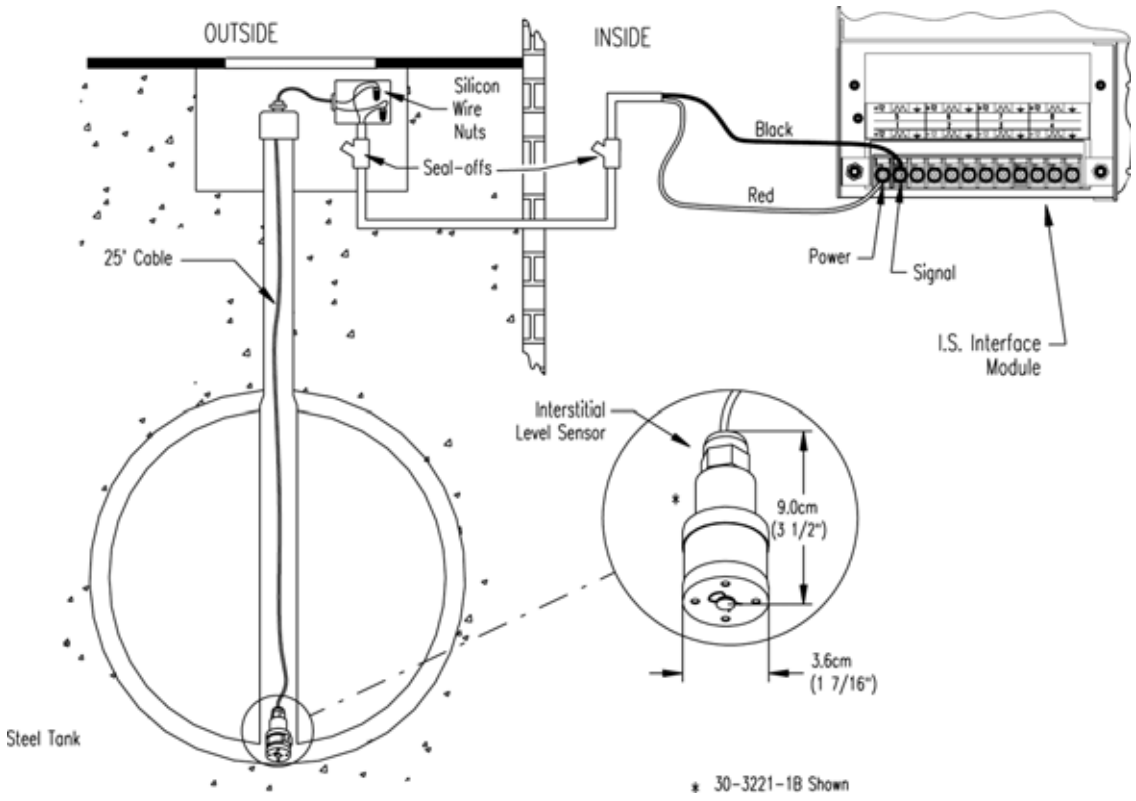

Figure 23: Interstitial Level Sensor Installation

SiteSentinel iTouch Controller Setup for Interstitial Level Sensor

1. Configure the barrier position to be a generic sensor (or if using Site-Connect choose the appropriate icon) and install that position.
2. Set the **lower** alarm threshold to 2.5 volts and set the **upper** alarm threshold to 5.0 volts (disables upper threshold).
   - If monitoring a **normally wet well**, the lower threshold will indicate that the liquid is too low.
   - If monitoring a **normally dry well**, the lower threshold indicates that liquid is too high.
3. Program the alarms associated with the lower threshold that you wish to activate if the sensor detects hydrocarbon liquid.

Testing the Float Sensor

Warning

When working in the hazardous area use caution to avoid a hazardous situation.

When testing the sensor, work in a well-ventilated area with no hot surfaces or open flames.

If Sensor Installed in a Normally DRY Well

- Place the float in the UPPER position – this should trigger an alarm in the Controller.
- Return the float to the LOWER position – the alarm should end.

If Sensor Installed in a Normally WET Well

- Place the float in the LOWER position – this should trigger an alarm in the Controller.
- Return the float to the UPPER position – the alarm should end.

If the Controller fails to register the alarm condition, check your programmed thresholds in the Controller.

Check the orientation of the float as described on page 65.

Disconnecting the sensor should trigger a alarm and shorting the sensor should be out of alarm. Check all wiring and junction boxes to ensuring continuity without shorts.

30-3222 Hydrocarbon Vapor Sensor

About Part #30-3222

The hydrocarbon vapor sensor is designed to detect hydrocarbon vapors in monitoring wells and the interstitial areas of a double-walled tank. The presence of these vapors could indicate a potentially dangerous leak that could lead to safety and environmental problems.

The sensor is made from a long-life resistive element that increases dramatically in resistance in the presence of hydrocarbon vapors. After the vapors have dissipated, the sensor returns to normal and is ready to detect hydrocarbon vapors again. In the event of a break in the cable, the system will activate the alarm.

Specifications

Operating Temperature	–20 °C to +50 °C (–4 °F to +122 °F)
Dimensions	2.3 cm (0.9 in) dia. x
	8.9 cm (3.5 in) long
Cable	4.5 m (12 ft) gas & oil resistant
Nominal Resistance	
Uncontaminated	3K – 5K ohms
Contaminated	10K – 200K ohms

To ensure safe operating conditions the sensor has been designed to connect to OPW Fuel Management Systems systems only.

Installing the 30-3222

Caution

When installing, avoid any immersion in liquid (either hydrocarbon or water). Immersion shortens the sensor's life. Immersion may also prevent the sensor from working properly.
This sensor requires ONE Interface Module position.

- Review Figure 24 on page 70.
- Use Table 12 below to connect the sensor to the Controller I.S. Interface Module terminals.
- Use the supplied cable gland and silicon wire nuts.Install seal-offs at both ends of the conduit run
- Install seal-offs at both ends of the conduit run

Connections

I.S. Interface Module Position	Sensor Wire
+12	Red
	Black
	No connection

Table 12: Hydrocarbon Vapor Sensor Wiring

Typical Hydrocarbon Vapor Sensor Installation

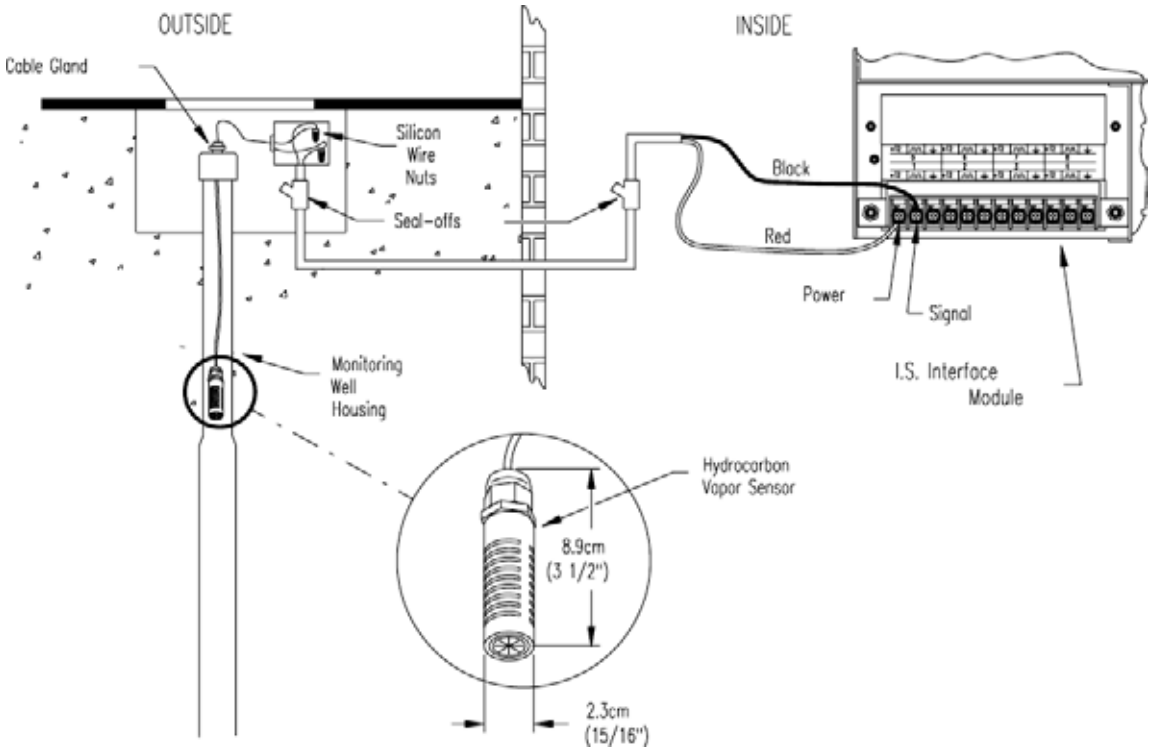

Figure 24: Hydrocarbon Vapor Sensor Installation

SiteSentinel iTouch Controller Setup for Hydrocarbon Vapor Sensor

1. Configure the barrier position to be a **generic** sensor (or if using Site-Connect choose the appropriate icon) and install that position.
2. Using the Controller take a dynamic reading of the hydrocarbon portion of the sensor.
3. Set the **lower** alarm threshold to be 0.1 volts lower than the reading taken (this assumes that there is no current hydrocarbon contamination).
4. Set the **upper** alarm threshold to be 5.0 volts(disables upper threshold).
5. Program your alarms to activate if the sensor detects hydrocarbons.

Testing and Decontaminating the Hydrocarbon Vapor Sensor

To test the hydrocarbon vapor sensor:

1. Pour some mineral spirits into an empty can or other container.
2. Suspend the hydrocarbon sensor insidethe container, in the air above the mineral spirits.
3. Wait approximately 10 minutes. After ten minutes, any Controller alarms or events associated with the sensor should have triggered.

To clean the sensor from hydrocarbon contamination (or after testing):

1. Immerse the sensor in denatured alcohol.
2. Let the sensor soak for one hour.
3. Remove the sensor from the alcoholand let stand for one hour before using.

The sensor should have returned to nearly its original resistance, but it may be necessary to re-adjust the Controller's thresholds.

If the Controller fails to register the alarm condition, check your pro-grammed thresholds in the Controller. Disconnecting the sensor should trig-ger a alarm and shorting the sensor should be out of alarm. Check all wiring and junction boxes to ensuring continuity without shorts.

30-3223 Interstitial Optical Liquid Sensor

About the 30-3223

The interstitial optical liquid sensor is used primarily to monitor the interstitial area of double-walled tanks. This sensor incorporates a long-life optical prism and can also be used in sumps, dispenser pans and other locations where the presence of a liquid could indicate that a leak has occurred.

The sensor does NOT differentiate water and hydrocarbon liquid. In the event of a break in the cable, the system will activate the alarm.

Specifications

Operating Temperature	–20 °C to +50 °C (–4 °F to +122 °F)
Dimensions	1.8 cm (0.7 in) dia. x
	7.0 cm (2.8 in) long
Cable	6.1 m (20 ft) gas & oil resistant

To ensure safe operating conditions the sensor has been designed to connect to OPW Fuel Management Systems systems only.

Installing the 30-3223

- Review Figure 25 on page 74.
- Use Table 13 below to connect the sensor to the Controller I.S. Interface Module terminals.
- Use the supplied cable gland and silicon wire nuts.
- Install seal-offs at both ends of the conduit run.

This sensor requires ONE Interface Module position.

Connections

I.S. Interface Module Position	Sensor Wire
+12	Red
	Black
	No connection

Table 13: Interstitial Optical Liquid Sensor Wiring

Typical Interstitial Optical Liquid Sensor Installation

- Interstitial Optical Liquid Sensor Installation

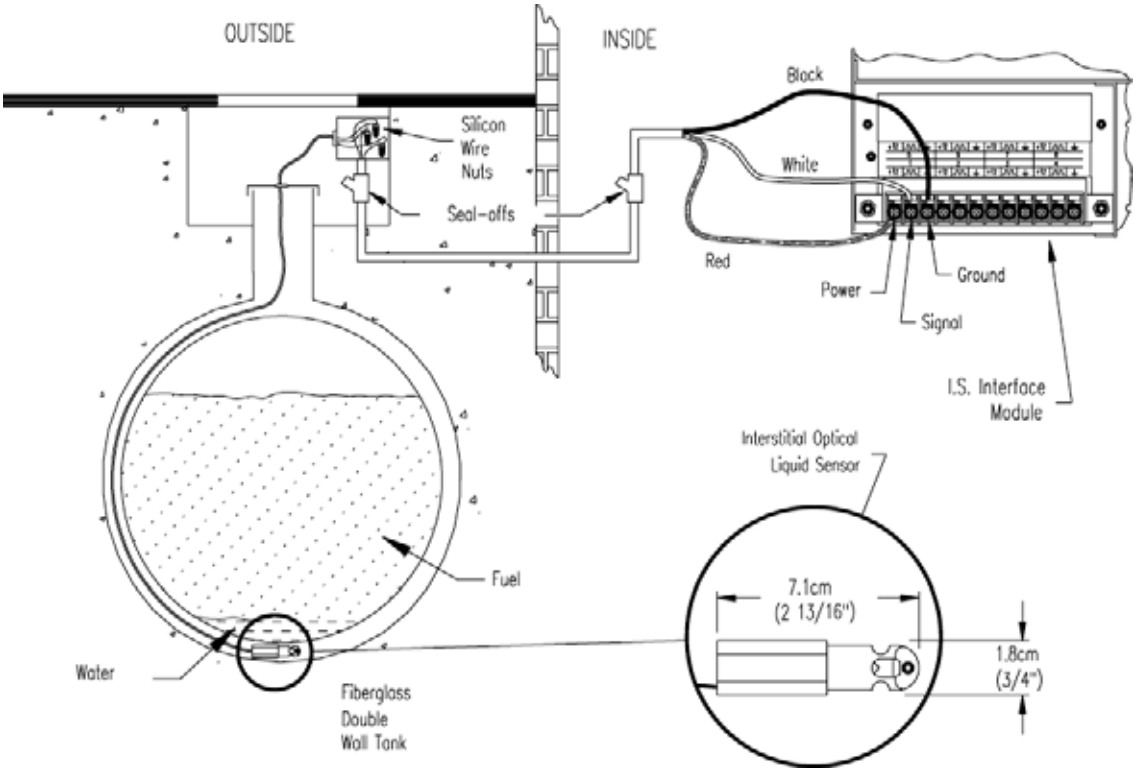

Figure 25: Interstitial Optical Liquid Sensor Installation

Controller Setup for Interstitial Optical Liquid Sensor

1. Configure the barrier position to be a **generic** sensor (or if using SiteConnect choose the appropriate icon) and install that position.
2. Set the **lower** alarm threshold to 0.2 volts and set the **upper** alarm threshold to 5.0 volts (disables upper threshold).
3. Program the alarms associated with the lower threshold that you wish to activate if the sensor detects liquid.

Testing the Interstitial Optical Liquid Sensor

1. Immerse the sensor in water. This should trigger the alarm in the Controller.
2. Remove the sensor from the water. Confirm that the Controller is no longer in alarm.

If the Controller fails to go in to alarm condition, check that the thresholds programmed in the system are correct. Disconnecting the sensor should trigger an alarm. Shorting the sensor should be out of alarm. Check all wiring and junction boxes to ensuring continuity without shorts.

30-3224 Combo Single Level/ Hydrocarbon Liquid Sump Sensor

Part # 30-3224

This combination sensor is made from a Hydrocarbon Liquid Sump Sensor (page 52) with an Interstitial Level Sensor (page 67) clipped to the side.

The sensor is designed to detect the presence of liquid hydrocarbons and water in sumps, dispenser pans and other locations where the presence of a liquid could indicate that a leak has occurred.

The sensor contains a carbon/polymer material that changes its resistance when exposed to liquid hydrocarbons. A float switch simply clips onto the hydrocarbon sensor and can be positioned at any desired height to activate in the presence of liquid.

This sensor can be used to monitor wet wells to ensure that a liquid is normally present In the event of a break in the cable, the system will activate the alarm.

Specifications

Operating Temperature	–20 °C to +50 °C (–4 °F to +122 °F)
Dimensions 30-3221-1A	3.4 cm (1.3 in) dia. x 10 cm (3.9 in) long
Dimensions 30-3219-12	4.4 cm (1.7 in) dia. x 33.5 cm (13.2 in) long
Nominal resistance	
Uncontaminated	1K – 5K ohms
Contaminated	30K – 200K ohms
Cable	3.6 m (12 ft) gas & oil resistant.

To ensure safe operating conditions the sensor has been designed to connect to OPW Fuel Management Systems systems only.

Installing the 30-3224

Note

If monitoring a normally dry well, use a meter to orient the Single-Level Float portion of the sensor so the sensor is in the closed state with NO liquid present (float in lower position). If monitoring a normally wet well, orient the float so that it is in the closed state WITH liquid present (float in upper position).

This sensor requires TWO Interface Module positions.

- Review Figure 26 on page 78.
- Use Table 14 below to connect the sensor to the Controller I.S. Interface Module terminals.
- Use the supplied cable gland and silicon wire nuts.
- Install seal-offs at both ends of the conduit run.

Connections

Note

Only three wires are required to connect the sensor to the Controller positions. Use one wire as the common power connection to each sensor (red wires). The other two wires bring each sensor's data back to the separate Controller data terminal.

I.S. Interface Module Position 1 Terminal	**Sensor Wire**
+12	Red (joined 30-3219-12 amd 30-3221-1A red leads, in junction box).
	Black (from Hydrocarbon Sensor)
	No connection
I.S. Interface Module Position 2 Terminal	**Sensor Wire**
+12	No connection
	White (from Liquid Level Sensor)
	No connection

Table 14: Combo Single Level/Hydrocarbon Sensor Wiring

Typical Combo Single-Level/Hydrocarbon Liquid Sump Sensor Installation

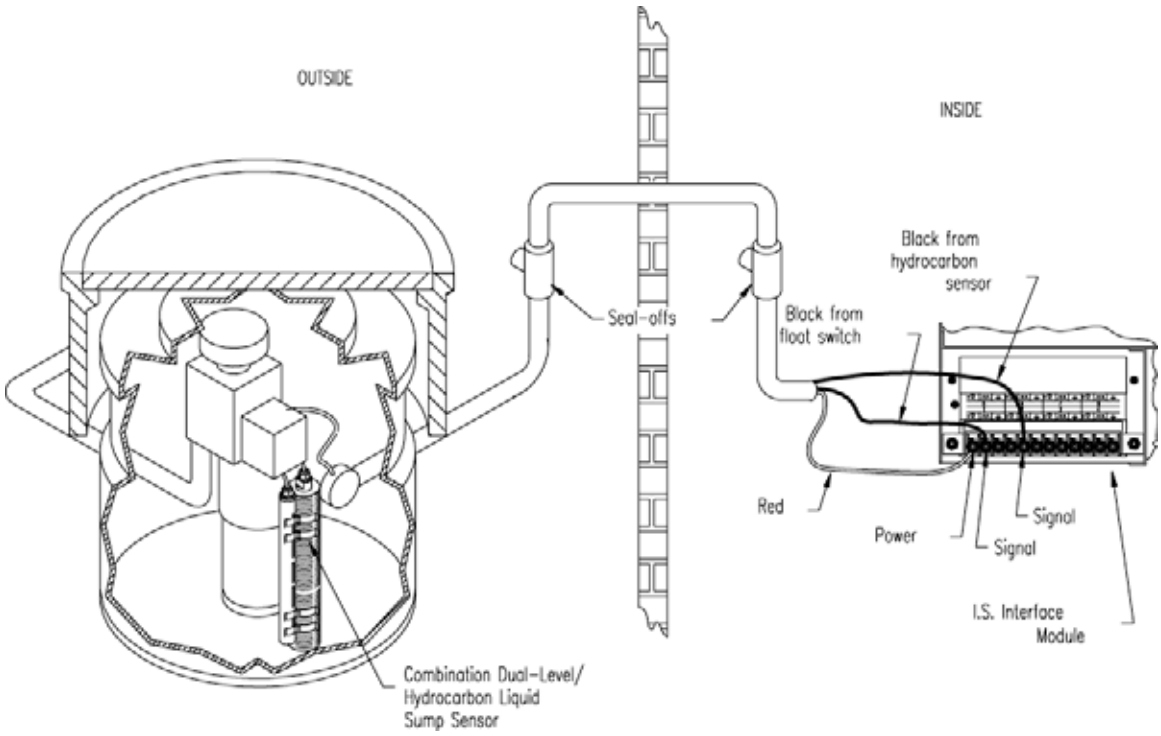

Figure 26: Combo Single-Level & Hydrocarbon Liquid Sensor Installation

Controller Setup for Combo Single-Level/Hydrocarbon Sump Sensor

1st Barrier Position (Float Sensor)

1. Configure the barrier position to be a sensor (or if using SiteConnect choose the appropriate icon) and install that position.
2. Set the **lower** alarm threshold to 2.5 volts.
3. Set the **upper** alarm threshold to 5.0 volts (disables upper threshold).
   - If monitoring a **normally wet well**, the lower threshold will indicate that the liquid is too low.
   - If monitoring a **normally dry well**, the lower threshold indicates that liquid is too high.
4. Program the alarms associated with the lower threshold that you wish to activate if the sensor detects hydrocarbon liquid.

2nd Barrier Position (Hydrocarbon Sensor)

1. Configure the barrier position to be a sensor (or if using SiteConnect choose the appropriate icon) and install that position.
2. Using the Controller, take a dynamic reading of the hydrocarbon portion of the sensor.
3. Set the **lower** alarm threshold to 0.2 volts lower than the reading taken (this assumes that there is no current hydrocarbon contamination).
4. Set the **upper** alarm threshold to 5.0 volts (disables upper threshold).
5. Program the alarms associated with the lower threshold that you wish to activate if the sensor detects hydrocarbon liquid.

Testing the Float Sensor Portion of the Combo Sensor

Sensor installed in a normally DRY well

- Place the float in the UPPER position. This should trigger an alarm in the Controller.
- Return the float to its LOWER position. Confirm that the alarm ends in the Controller.

Sensor installed in a normally WET well

- Place the float in the LOWER position. This should trigger an alarm in the Controller.
- Return the float to the upper position and check that the Controller is no longer in alarm.

If the Controller fails to register the alarm condition, check your programmed thresholds in the Controller.

Check the orientation of the float as described on page 79.

Disconnecting the sensor should trigger a alarm and shorting the sensor should be out of alarm. Check all wiring and junction boxes to ensuring continuity without shorts.

Testing and Decontaminating the Hydrocarbon Sensor Portion of the Combo Sensor

Warning

When working in the hazardous area use caution to avoid a hazardous situation. When testing or decontaminating the sensor, work in a well-ventilated area with no hot surfaces or open flames.

If the SiteSentinel iTouch Controller fails to detect alarm conditions simulated here, also check that your Controller thresholds are correct.

- **Testing the Hydrocarbon Liquid Sump Sensor**. Immerse the polymer in mineral spirits for about 10 minutes. Remove the sensor and let it hang to air dry. After another 10 minutes any Controller alarms or events associated with the hydrocarbon sensor should trigger. Disconnect this portion of the sensor from the Controller -- an immediate alarm should result. Short across these Controller positions -- an alarm should also occur. If the open lead and/or short lead test fail, check all wiring and junction boxes for continuity.
- **Cleaning the Hydrocarbon Liquid Sump Sensor**. To clean hydrocarbon contamination from the sensor from testing or actual use, immerse the contaminated portion in denatured alcohol for one hour. Then, flush the sensor with water to remove any residue. Leave the sensor to "settle" for another hour. The sensor should return to nearly its original resistance, but it may be necessary to re-adjust the Controller’s thresholds.

30-3225 Combo Dual Level/ Hydrocarbon Liquid Sump Sensor

About the 30-3225

This sensor is made from the hydrocarbon liquid sump sensor (30-3219-12) and from the dual level reservoir sensor (30-3221-2) clipped to the side. The combination sump sensor is designed to detect the presence of liquid hydrocarbons and water in sumps, dispenser pans and other locations where the presence of a liquid could indicate that a leak has occurred.

The sensor contains a carbon/polymer material that changes its resistance when exposed to liquid hydrocarbons. The dual float switch simply clips onto the hydrocarbon sensor and can activate in the presence or absence of liquid. This sensor can be used to monitor wet wells to ensure that a liquid is normally present In the event of a break in the cable, the system will activate the alarm.

Specifications

Operating Temperature –20 °C to +50 °C (–4 °F to +122 °F)

Dimensions

30-3221-2	6 cm (2.4 in) dia. x
	35.6 cm (14 in) long
30-3219-12	4.4 cm (1.7 in) dia. x
	33.5 cm (13.2 in) long

Nominal Resistance

Uncontaminated	1K – 5K ohms
Contaminated	30K – 200K ohms

Cable 3.6 m (12 ft) gas & oil resistant cable.

To ensure safe operating conditions the sensor has been designed to connect to OPW Fuel Management Systems systems only.

Installing the 30-3225

Caution

Hydrocarbons float on water -- if this sensor is fully submerged, the polymer will NOT detect hydrocarbon liquid.

This sensor requires TWO Controller Interface Module positions.

- Review Figure 27 on page 84.
- Use Table 15 below to connect the sensor to the Controller I.S. Interface Module terminals.
- Use the supplied cable gland and silicon wire nuts.
- Install seal-offs at both ends of the conduit run

Note

For normally dry wells, use a meter to orient the Dual-Level Float portion of the sensor so the sensor is in the closed state with NO liquid present (float in lower position). For normally wet well, orient the float so that it is in the closed state WITH liquid present (float in upper position).

Combo Sensor Connections

I.S. Interface Module Position 1 Terminal	**Sensor Wire**
+12	Red (joined 30-3219-12 and 30-3221-2 red leads, in junction box).
	Black (from Hydrocarbon Sensor)
	No connection
I.S. Interface Module Position 2 Terminal	**Sensor Wire**
+12	No connection
	White (from Dual Liquid Level Sensor)
	No connection

Table 15: Combo Dual-Level/Hydrocarbon Liquid Sump Sensor

Note

Only three wires are required to connect the sensor to the Controller positions. Use one wire as the common power connection to each sensor (red wires). The other two wires bring each sensor's data back to the separate Controller data terminals.

Typical Combo Dual-Level Hydrocarbon Liquid Sump Sensor Installation

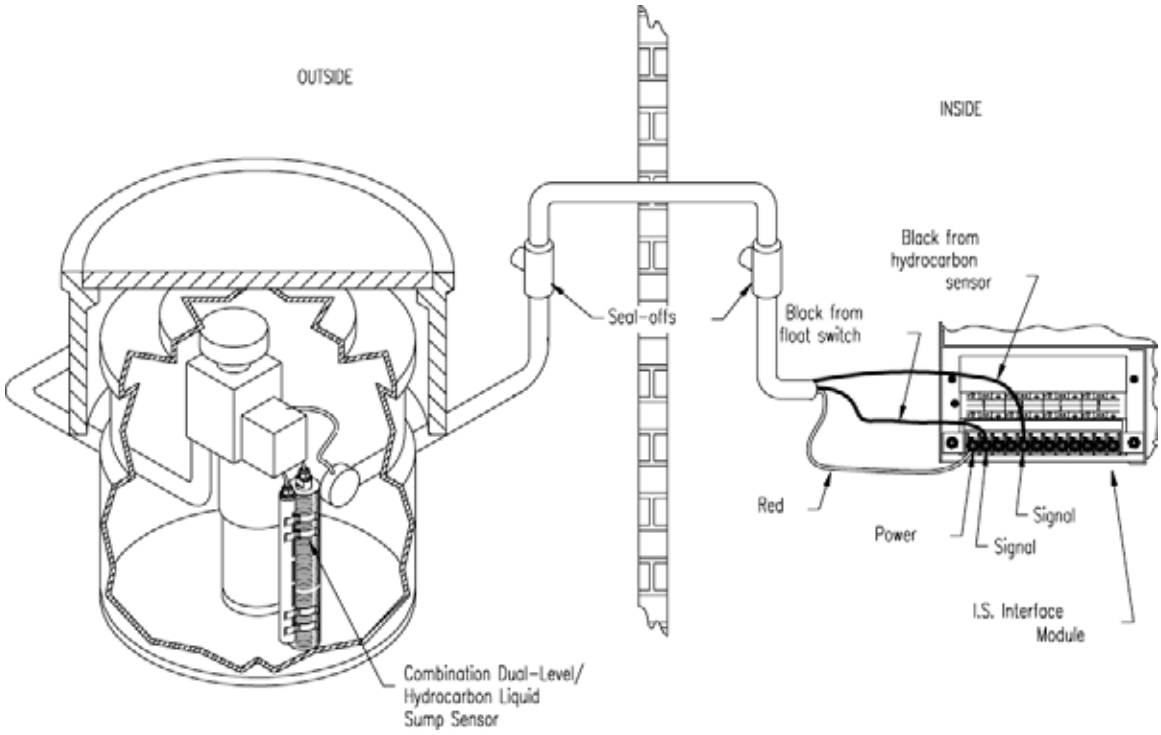

Figure 27: Combo Dual-Level & Hydrocarbon Liquid Sensor Installation

Controller Setup for 30-3225

1st Barrier Position (Dual Float Sensor)

1. Configure the barrier position to be a **generic** sensor (or if using Site-Connect choose the appropriate icon) and install that position.
2. Set the **lower** alarm threshold to 2.2 volts and set the upperalarm threshold to 3.4 volts
   - If monitoring a normally wet well, the 3.4-volt threshold will indicate that the liquid is too low, and the 2.2-volt threshold will indicate that the liquid is too high.
   - If monitoring a normally dry well, the 3.4-volt threshold indicates that liquid is above the lower float, and the 2.2-volt threshold indi-cates that liquid is above the upper float.
3. Use SiteConnect to program all alarms associated with the appropriate thresholds to activate if the sensor detects liquid.

2nd Barrier Position (Hydrocarbon Sensor)

1. Configure the barrier position to be a **generic** sensor (or if using SiteConnect choose the appropriate icon) and install that position.
2. Using the Controller, take a dynamic reading of the hydrocarbon portion of the sensor.
3. Set the **lower** alarm threshold to 0.2 volts lower than the reading taken (this assumes that there is no current hydrocarbon contamination).
4. Set the **upper** alarm threshold to 5.0 volts (disables upper threshold).
5. Use SiteConnect to program all alarms associated with the lower threshold to activate if the sensor detects hydrocarbon liquid.

Testing the Float Sensor Portion of the Combo Sensor

Sensor Installed in a Normally DRY Well

1. Place the LOWER float in the UPPER position. Place the UPPER float in the LOWER position. This should trigger an alarm in the Controller.
2. Place both the LOWER and UPPER floats in the UPPER position. This should trigger a "High-Level" alarm in the Controller.
3. Return both floats to the LOWER position. Confirm that the alarm ends in the Controller.

Sensor Installed in a Normally WET Well

1. Place the LOWER float in the LOWER position. Place the UPPER float in the LOWER position. This should trigger an alarm in the Controller.
2. Place the LOWER float in the UPPER position. Place the UPPER float in the UPPER position. This should trigger an alarm in the Controller.
3. Leave the LOWER float in the UPPER position and move the UPPER float to the LOWER position. Confirm that the Controller is no longer in alarm.

If the Controller fails to register the alarm condition, check your programmed thresholds in the Controller.

Check the orientation of the floats as described on page 84.

Disconnecting the sensor should trigger a alarm and shorting the sensor should defeat an alarm. Check all wiring and junction boxes to ensuring continuity without shorts.

Testing and Decontaminating the Hydrocarbon Portion of the Combo Sensor

Warning

When working in the hazardous area use caution to avoid a hazardous situation.

When testing or decontaminating the sensor, work in a well-ventilated area with no hot surfaces or open flames.

If the SiteSentinel iTouch Controller fails to detect alarm conditions simulated here, also check that your Controller thresholds are correct.

- **Testing the Hydrocarbon Liquid Sump Sensor**. Immerse the polymer in mineral spirits for about 10 minutes. Remove the sensor and let it hang to air dry. After another 10 minutes any Controller alarms or events associated with the hydrocarbon sensor should trigger. Disconnect this portion of the sensor from the Controller -- an immediate alarm should result. Short across these Controller positions -- an alarm should also occur. If the open lead and/or short lead test fail, check all wiring and junction boxes for continuity.
- **Cleaning the Hydrocarbon Liquid Sump Sensor**. To clean hydrocarbon contamination from the sensor from testing or actual use, immerse the contaminated portion in denatured alcohol for one hour. Then, flush the sensor with water to remove any residue. Leave the sensor to "settle" for another hour. The sensor should return to nearly its original resistance, but it may be necessary to re-adjust the Controller's thresholds.

Testing the Water Sensor Portion of the Combo Sensor

Immerse just the water detecting end of the sensor in tap water. Controller alarms or events associated with the water portion of the sensor should immediately trigger.

Short the water portion of the sensor -- an alarm should occur. If the short lead test fails, check all wiring and junction boxes for continuity.

External Device Connection

Figure 30 below shows how to connect all possible devices and accessories to your SiteSentinel iTouch Controller. Not all applications use all connections shown in the drawing.

Certain areas of the drawing are expanded in below in Figure 31 below, Figure 32 on page 88 and Figure 37 on page 89. The modem settings are detailed on page 94.

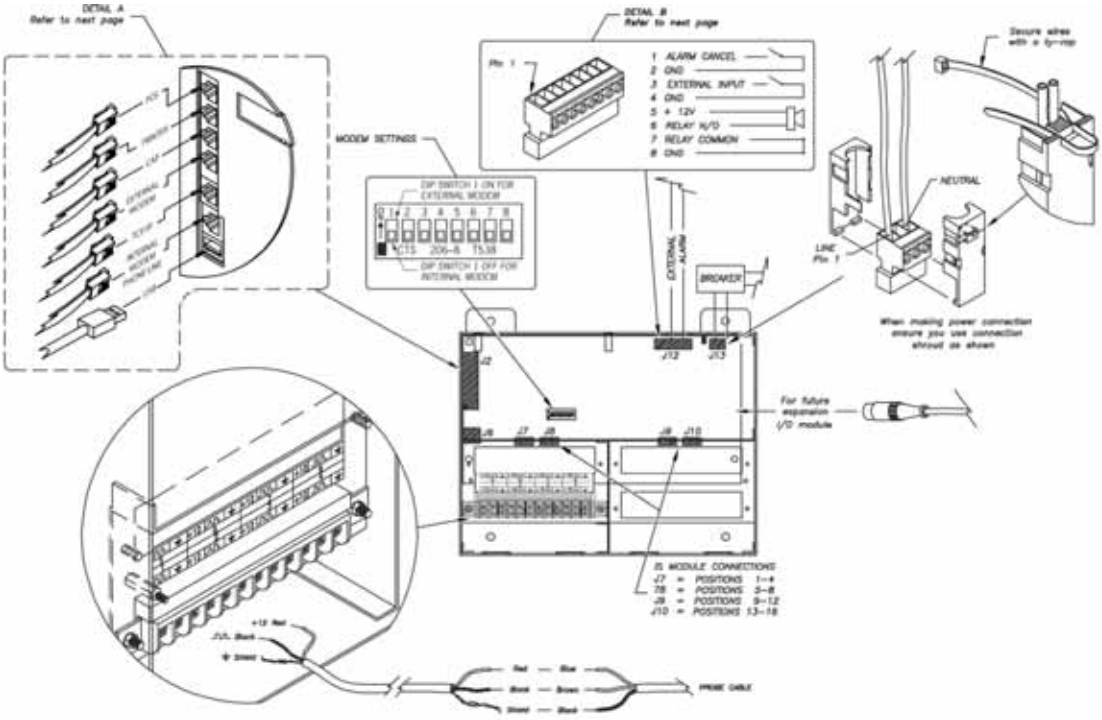

Figure 30: Connecting External Devices to the Controller

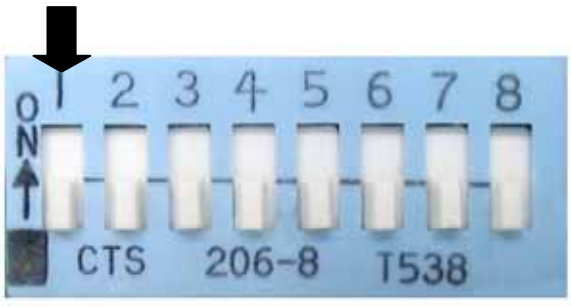

Figure 31: Dip Switch for Modem Settings

Note: Dip Switch 1 is used for internal selection ONLY. Use the “On” position to select external modem; the “Off” is for internal modem. Once the dip switch is changed, the SiteSentinel iTouch controller needs to be restarted.

RJ-45 Communication Ports

The SiteSentinel iTouch Controller has five RJ-45 ports as shown in Figure 32 below. From top to bottom, they are for:

- POS (Point-of-Sale) Device (see Appendix C - POS Interface on page 96
- Printer
- CAP port: configuration port for Site Connect
- TCP/IP (Internet -- to configure see Appendix G - Setting Up a TCP/IP Interface on page 108)
- External Modem (optional)
- Internal Modem (standard)

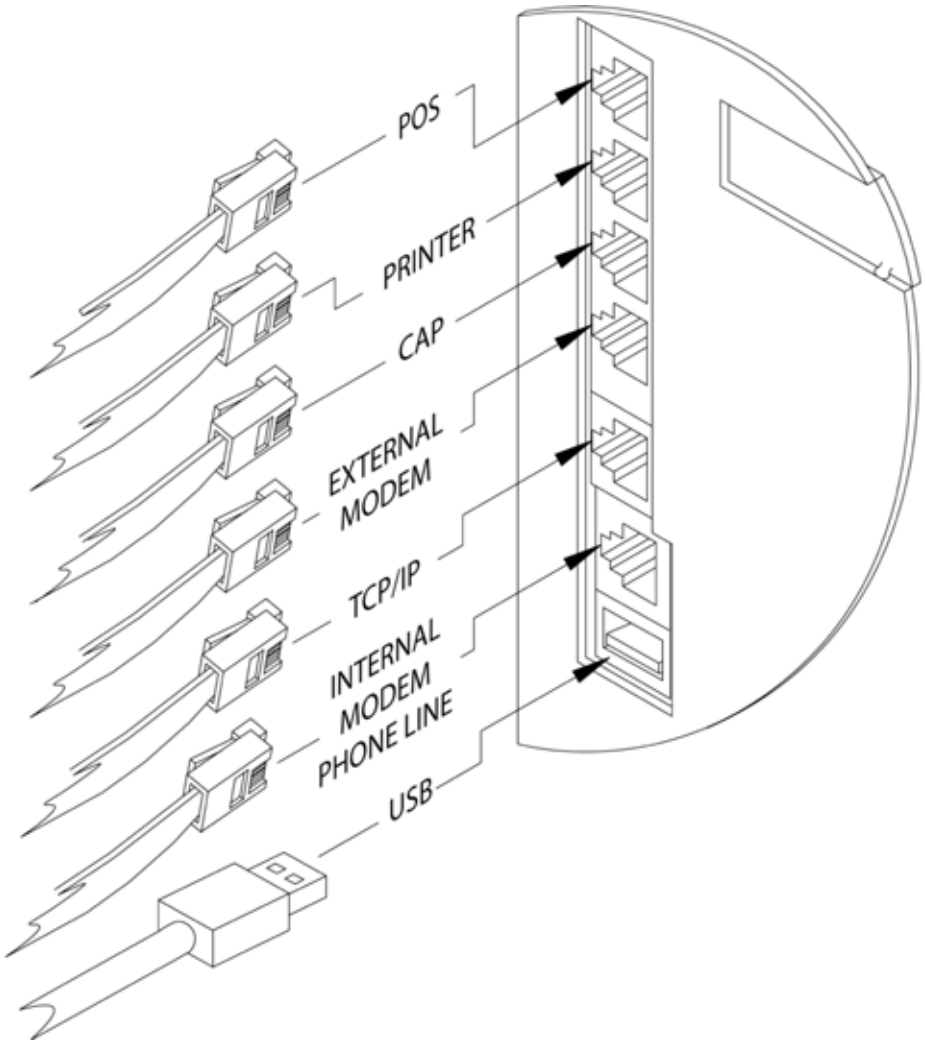

Figure 32: SiteSentinel iTouch RJ-45 Communication Ports

Terminal Block Detail

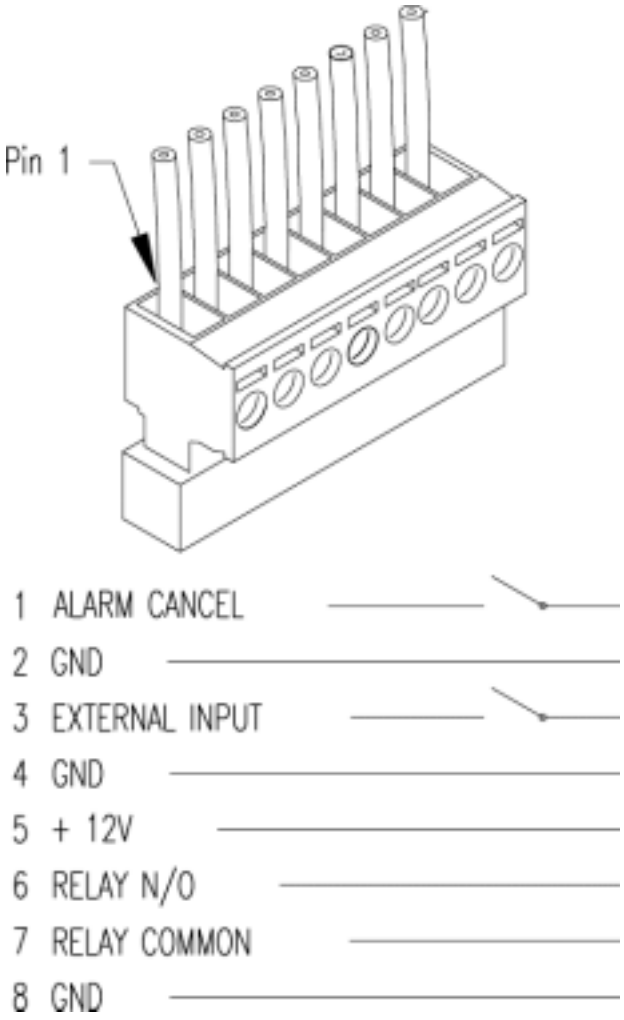

Figure 33: SiteSentinel iTouch Terminal Block Connections

Note

If using the external alarm option (see page 94), connect an ALARM CANCEL button across terminals 1 and 2.

Printer Option

1. Mount the printer bracket -- see Figure 5 on page 20.
2. Slide the printer into the wall bracket.
3. Attach 9-pin Dsub connector to the printer and the other end to the Controllers RJ-45 connector – see Figure 30 on page 87.
4. Plug in the printer's power cable that exits from the 9 pin dsub.
5. Set DIP switches in printer. See tables in this section. Refer to the printers operating instructions for paper loading and testing.

The printer is factory-configured with the default settings in Table 16, Table 17 (below) and Table 18 (page 91). These settings will allow the printer to function properly. If for any reason you need to re-configure the printer refer to the printer's operating instructions.

Switch # 1	Setting	Function
1	OFF	Serial input
2	ON	High printing speed
3	ON	Auto paper loading
4	OFF	No line feed after carriage return
5	ON	DIP SW enabled
6	OFF	Print density 100%
7	ON	
8	ON	

Table 16: Printer DIP Switch 1 Settings

Switch # 2	Setting	Function
1	ON	40 columns
2	ON	User defined characters
3	ON	Ordinary characters
4	ON	Normal zero
5	ON	American character set
6	ON	
7	ON	
8	OFF	

Table 17: Printer DIP Switch 2 Settings

Switch # 3	Setting	Function
1	ON	8 data bits
2	ON	No parity
3	ON	Odd parity
4	ON	Hardware flow control
5	OFF	Baud Rate 19,200
6	ON	
7	ON	
8	OFF	

Table 18: Printer DIP Switch 3 Settings

Modem Connections

If you purchased your SiteSentinel iTouch with the internal modem option (OPW Fuel Management Systems part number **75-2042**), the modem will have come pre-installed.

Connect the phone line from the junction box to the Controller using the supplied RJ-11 cable. See Figure 32 on page 88 for the Phone Line port location.

If you are upgrading an existing system with the internal modem you will need to set the dip switch to **internal modem** before inserting the modem into its socket.

If the internal modem is not installed or if you are using an external modem, the dip switch must be set to **external modem**.

When using an external modem attach the modem to the external modem port using an external modem cable (OPW Fuel Management Systems part number **20-1517-04**). See Figure 32 on page 88 for the External Modem port location.

CAP Connection for SiteConnect Software

IMPORTANT

Plug in the battery before configuring the SiteSentinel iTouch.

The SiteSentinel iTouch Controller is normally configured using the supplied direct connect cable and SiteConnect Windows software. Connect the RJ45 end of the cable into the CAP port on the Controller and the other end of the cable into one of your PC's serial ports. See Figure 32 on page 88 for the CAP port location.

The SiteSentinel iTouch Controller configuration can be modified remotely using the modem connections described above. SiteConnect is required on the remote PC.

After installing the SiteConnect software, consult the SiteConnect help file for configuration details.

You can also use SiteConnect to send or upgrade SiteSentinel iTouch software (see Appendix D on page 98).

Note

If a software upgrade fails, change the connection speed to 19,200 and try to connect to the SiteSentinel iTouch Controller again.

POS Interface Option

The SiteSentinel iTouch system can be interrogated by an in-store POS device via the SiteSentinel iTouch POS port.

Please contact OPW Fuel Management Systems for details.

See Appendix C page 96.

Built-in TCP/IP Connections

Site Sentinel 1 is equipped with built-in TCP/IP port and supports DHCP function. For port location, please refer to Figure 32 on page 88. The controller will automatically accept the TCP/IP address assigned by local LAN.

Appendix A – LCD Screen Icons

Sensor, Probe and Controller Status Icons

Leak Test Result Icons

Figure 34: LCD Screen Icons

Appendix B – Alarm Kit Option

Alarm Kit Part Numbers

- **30-2015** (115 VAC)
- **30-2015-230** (230 VAC)

The Alarm Box requires mains/line voltage (see Figure 35 on page 95). Obtain power from the distribution panel and run the wiring through steel conduit. Use 14-gauge gas and oil resistant cable.

The Alarm Box requires an external relay. This relay is not supplied with the Alarm Kit -- obtain a relay with the specifications given in Table 19 below.

Coil Rating	12 VDC @ less than 100 mA
Contact Rating	115 or 230 VAC @ greater than 500 mA.

Table 19: External Alarm Relay Specifications (NOT Supplied)

Installation

1. Install the relay in an external 4” x 4” electrical box or other suitable enclosure.
2. Run rigid conduit from the SiteSentinel iTouch Controller to the relay enclosure.
3. Run the same kind of conduit from the relay enclosure to the Alarm Box.

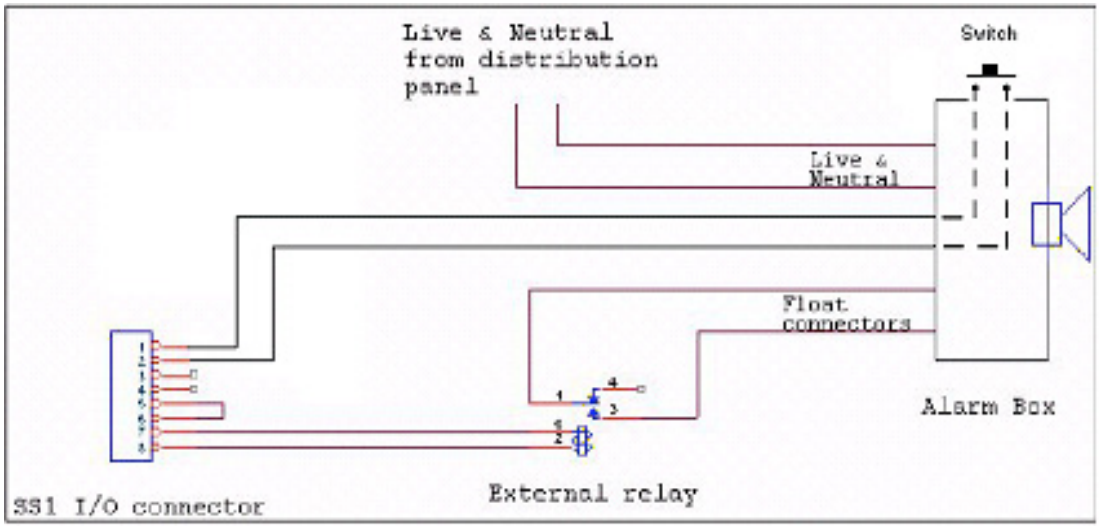

Figure 35: External Alarm Wiring

The alarm box will sound its horn and illuminate its light when the contacts close in the SiteSentinel iTouch Controller.

Press the SILENCE button on the Alarm Box to silence the horn. The Alarm Box light, however, remains illuminated for as long as the contacts in SiteSentinel iTouch Controller are closed or the switch is pressed.

Attach a switch across position 1 and 2 (see Figure 35 above) to energize or de- energize an external relay.

Alarm Kit Connections

See Figure 35 above. Connections are also listed in the table in Table 23 below.

From	**To**
Switch	Controller I/O connector PINS 1 and 2
Relay Coil	Controller I/O connector PINS 7 and 8
Relay NORMALLY OPEN contacts	Alarm Box **FLOAT** connectors
Live and neutral AC from distribution panel	Alarm Box **AC1** and **AC2** connectors

Table 23: Alarm Kit Connections

Appendix C – POS Interface

This Appendix covers the physical connection between the Site Sentinel 1 and the Tokheim Fuel POS system.

SiteSentinel iTouch POS Port

If you order the SiteSentinel with the POS option, you'll get a cable, part number 20-1586.

Use SiteConnect (from main menu: **Configuration** > **SiteSentinel iTouch Port Parameters**) to program the following:

- Data bits: **8**
- Parity: **NONE**
- Stop Bits: **1**
- Port: **POS**
- Connect Speed: **1200**

Click **Ok** when done to save the settings.

Prepare and Attach the Cable

See Figure 36 below to prepare a cable to connect the Enraf to the SiteSentinel iTouch
POS port.

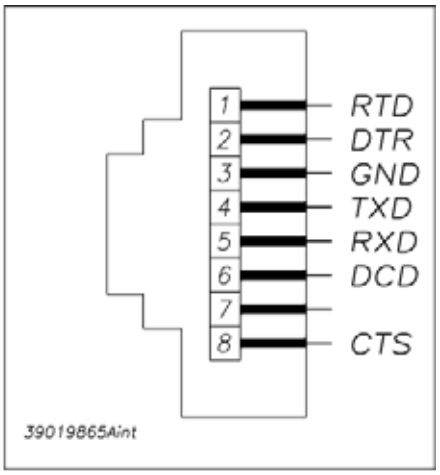

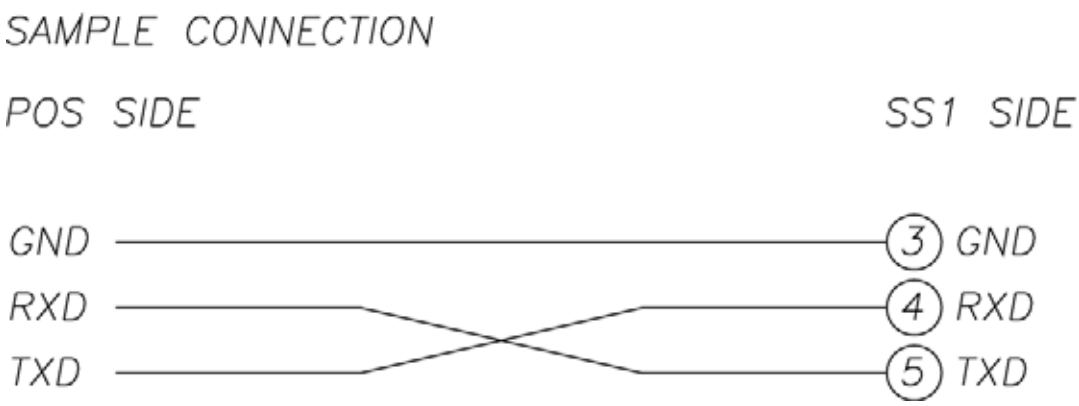

Figure 36: Pinout for POS-to-SiteSentinel iTouch Cable

Appendix D - Upgrading SiteSentinel iTouch Software Via SiteConnect

The following steps describe the procedure to upgrade SiteSentinel iTouch controllers software using the Hardware Flash Update Feature:

1. Connect PC to the Controller (Port C, the 3rd from the top).
2. Launch the SiteConnect application.

Note

You must be running SiteConnect version 2.8.10 or higher.

3. Click the **(New Profile)** icon to make a new site profile.
4. Enter "1-2" in the **Site Telephone #** field and click **OK**
5. Give it a **Profile File Name** (in the format xxxxx.pro) and click **OK**.
6. Click the **(Direct Connect)** icon to connect to the Controller.
7. Select a **Port** and a **Connect Speed** and click OK.
8. Acknowledge all the dialog boxes that follow.
9. Choose **Controller** > **Retrieve SiteSentinel iTouch Configuration**.
10. Click **Proceed**.
11. Acknowledge all the dialog boxes that follow.
12. Select **File** > **Save** to save the profile.
13. Select **Configuration** > **SiteSentinel iTouch Port Parameters**.
14. Change the **POS** port to a CAP/Modem port.
15. Change the CAP/MODEM speed to 19,200 and then click **OK**.
16. Acknowledge all the dialog boxes that follow.
17. Select **Tools** > **Hardware Flash Update**.
18. Select the new **SS1.bin** file to be downloaded to the Controller and then click **OK**
19. Click **OK** to the **Send Flash Update to SiteSentinel iTouch Controller?** prompt.

20. Click **OK** to the **SiteSentinel iTouch Ready to Receive the Update** prompt.
21. Wait until the download is complete. (about 15 minutes)
22. Acknowledge all the dialog boxes that follow.
23. Connect by selecting the **(Direct Connect)** icon and leave 19,200 for the communication speed.
24. Click **OK**.
25. Acknowledge all the dialog boxes that follow.
26. Select **Configuration** > **SiteSentinel iTouch Port Parameters**.
27. Change the POS Port to the CAP/MODEM port
28. Change the CAP/MODEM speed to the original 9600 baud connection speed and click **OK**.
29. Acknowledge all the dialog boxes that follow.
30. Select **Tools** > **Remote Cold Start**.
31. Acknowledge all dialog boxes.
32. Select **File**, then open the profile you saved earlier.
33. Click the (Direct Connect) icon to connect to the Controller.
34. Select the appropriate communication parameters and click **OK**.
35. Acknowledge all dialog boxes
36. Select **Controller** > **Restore**.
37. Disconnect from SiteConnect.

The download is complete. Verify the system is functioning properly.

Appendix E – OM4 Output Module Option

The optional OM4 Output Module expands your SiteSentinel iTouch capabilities by letting you connect as many as eight output devices to the SiteSentinel iTouch Controller. The OM4 Output Module communicates with the control-ler via a single-wire communica-tion port. Up to two OM4 Output Modules can be connected for a total of 8 output devices.

A common Output Module application is to turn off a submersible pump when low product is detected in the tank. Or, use it to activate an audible alarm when high product is detected in a tank.

See SiteConnect's online Help to program the alarms or events and to associate them with the Output Module.

Warnings

DO NOT connect the OM4 Output Module directly to a submersible pump! The OM4 output Module controls pumps INDIRECTLY, through relays or contactors.

High voltages exist insidethe OM4 Output Module. Only qualified technicians should open the unit. Before working on the OM4 Output Module, disconnect all power, including power to and from the relays.

Output relays in the OM4 Output Module are not intrinsically safe! DO NOT place probe and/or sensor wiring in conduit that contains wiring for devices connected to the OM4 Output Module.

Codes

- Relay wiring is classified Class 1 wiring.
- Installations must be in accordance with the National Electrical Code (NFPA No.70) and the Automotive and Marine Service Station Code (NFPA No. 30A). The installer is responsible to investigate and follow any applicable local codes.

Hazardous Area Definition

A fuel dispenser is a hazardous area asdefined in the National Electrical Code.Do not mount the OM4 Output Module within a hazardous area. Do not attach this unit to any devices that are located in the hazardous area.

OM4 Output Module Specifications

Field Wiring Rating	105°C, 600V Type RH. TW, RFH-2 or equal
Power Requirements	12VDC, 0.5A Max. provided by SS1 controller
Dimensions	6" W x 6" H x 4” D (15 cm x 15 cm x 10 cm)
Ambient Temperature	32°F - 104°F (0°C - 40°C)
Relay OUTPUT Rating	5A @ 240 VAC / 5A @ 24 VDC

Table 20 Wiring Connections for Alarm Kit

Installing the OM41

1. Choose a location for the first OM4 Output Module within the six-foot reach of the supplied DIN cable (OPWFuel Management Systems part number 20-1582).

Note

If installing a second OM4 Output Module, place it within four feet of the first. Longer distances may cause improper operation. Allow room at the bottom of the module(s) for conduit.

2. Remove the cover/module assembly from each OM4 box.
3. ount each box to a wall using the box’s four mounting holes.

Note

If installing two OM4 Output Module boxes, run dedicated steel conduit between them for the additional power and communication wiring.

Run steel conduit for the relays to a knock-out on the bottom of EACH box. When installing two OM4 Output Module boxes, DO NOT route the relay wiring through box to the other! Doing so may cause improper operation. Pull all relay wiring through the conduit(s).

4. See Figure 37 Remove the metal plug from the right side of the SiteSentinel iTouch Controller to expose the DIN connector inside.
5. See Figure 38. Attach the DIN connector on the 20-1582 cable to the Controller.
6. Route the other end of the 20-1582 cable through the supplied bushing/strain relief.
7. Insert the bushing into a knockout hole in the first OM4 Output Module box. Secure the bushing to the box.

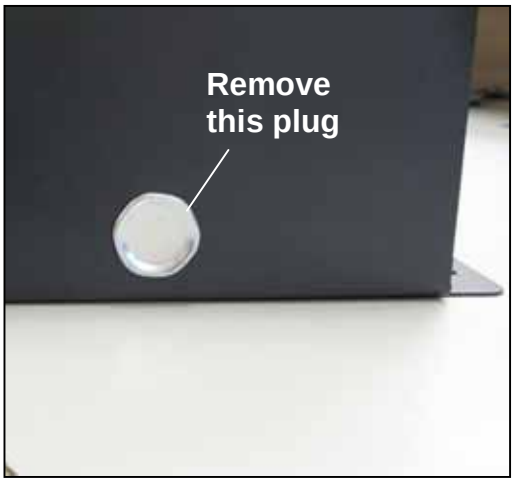

Figure 37: SS1-to-OM4 Connection

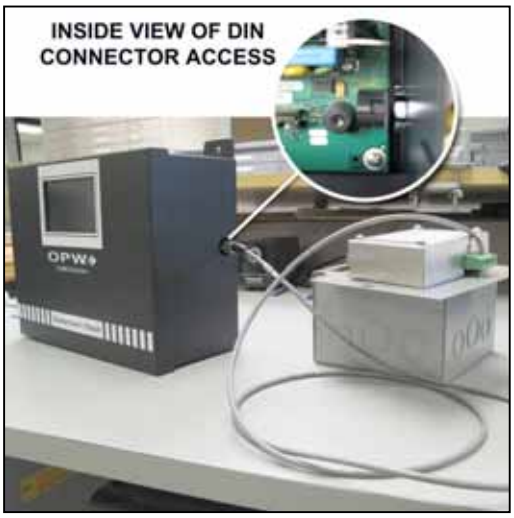

Figure 38: DIN Connector Access

Note: the field wiring terminal locks are removable to ease installation.

See Figure 39 below. Connect the red and black wires from the 20-1582 cable to the first OM4 Output Module's POWER terminals (order not important). Connect the green (or brown) wire to the SIGNAL terminal.

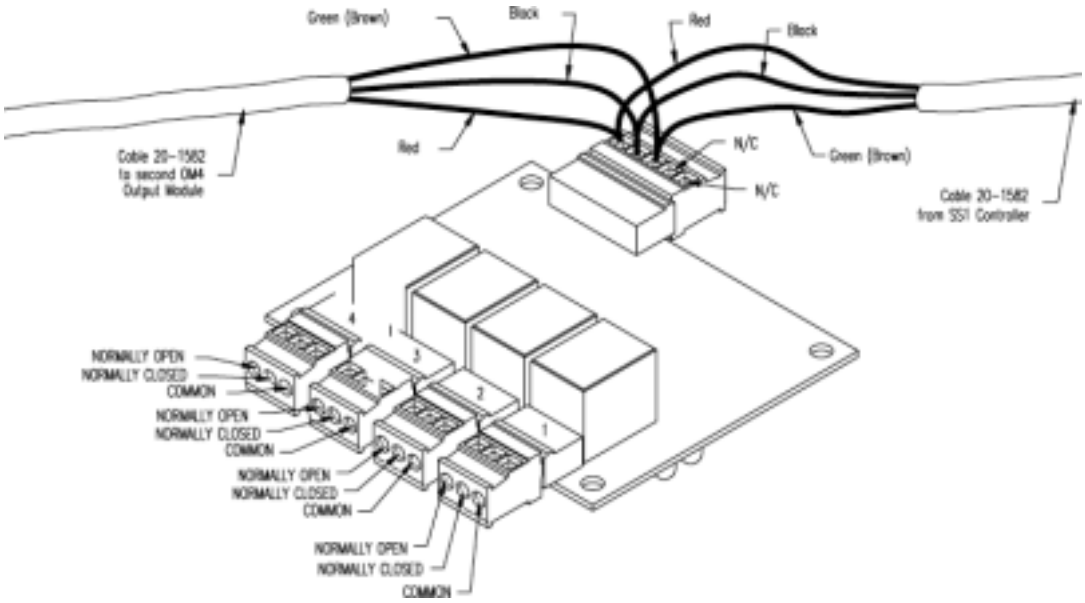

Figure 39: OM4 Output Module Wiring

When installing two OM4 OutputModule boxes, cut off the round DIN end of the remaining 20-1582 cable and use it to daisy-chain the POWER and SIGNAL terminals together. Route this cable through the conduit connecting the boxes installed earlier.

1. Connect all relay field wiring to the correct terminal block(s).
2. See Figure 40 right. When installing two OM4 Output Module boxes, place the address jumper on the second OM4 on the sec-ond row of pins as shown. To do this, take off the four nuts securing the aluminum cover and remove it, exposing the circuit board. Set the jumper and replace the cover.
3. Reinstall each cover/module assembly to their boxes.

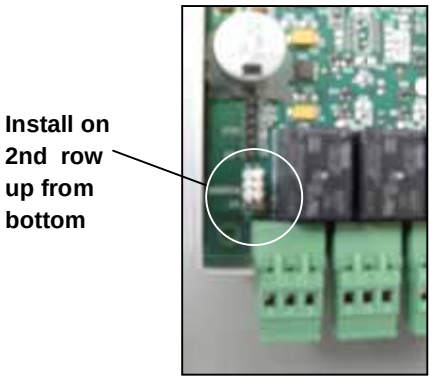

Figure 40: Address Jumper for #2 OM

Appendix F - LPG Probe Option

This appendix tells you how to install the optional 30-1510, 30-1511 and 30-1512 kits for LPG probes 30-B-xxx and Q400-xxx.

About the LPG Probe

30-1510 Probe Kit (Figure 41) Contents

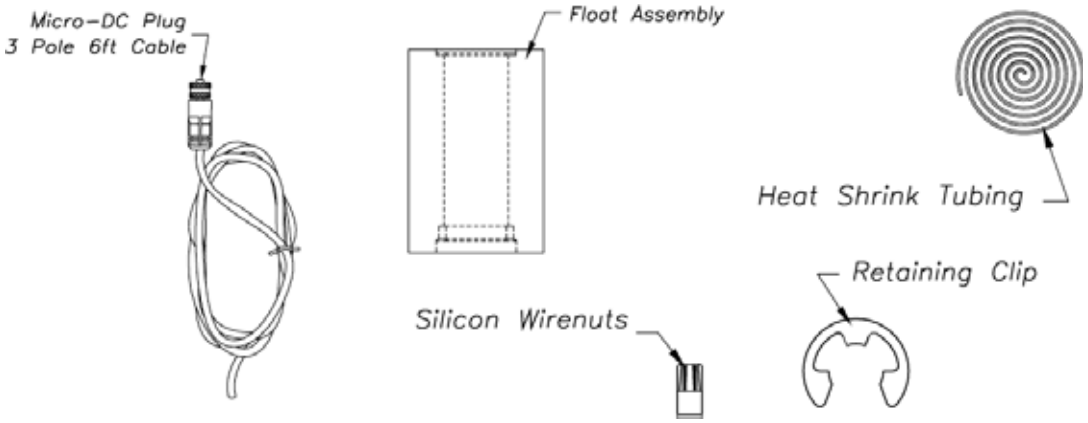

Figure 41: What's Supplied in the 30-1510 Kit

1 - Micro-DC Plug Pole 6ft Cable

1 - Heat-shrink tubing

1 - Retaining clip

3 - Silicon wire nuts

1 – Float

30-1511 Probe Kit (Figure 42) Contents

This kit is used with the Q0400-xxx, 1500, 2000 and Galaxy.

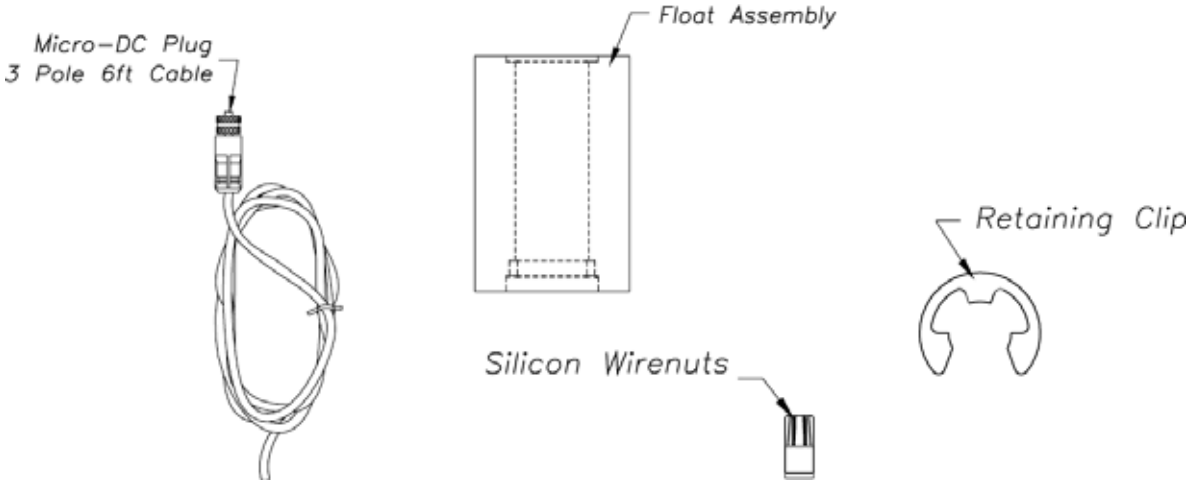

Figure 42: What's Supplied in the 30-1511 Kit

1 - Micro-DC Plug Pole 6ft Cable

1 - Retaining Clip

3 - Silicon Wire nuts

1 - Float

30-1512 Head Cover Kit (Figure 43) Contents

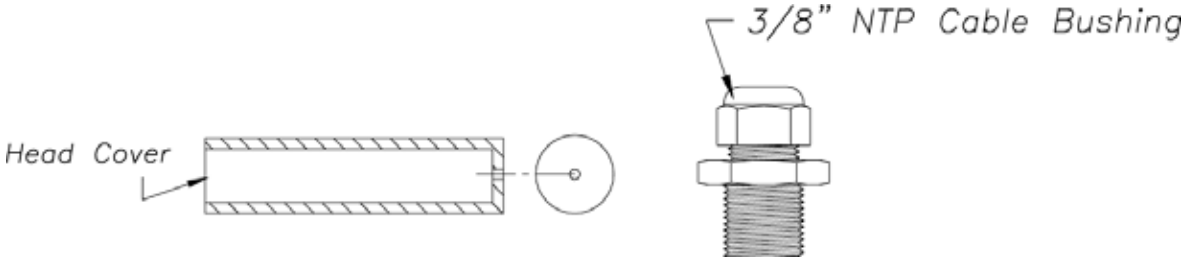

Figure 43: 30-1512 Head Cover Kit Contents

1- 3/8 NTP Cable Bushing

1- Head Cover

Installing the LPG Probe

Refer to Figure 44 below while working on the probes. Unless noted, instructions apply to both types of probes.

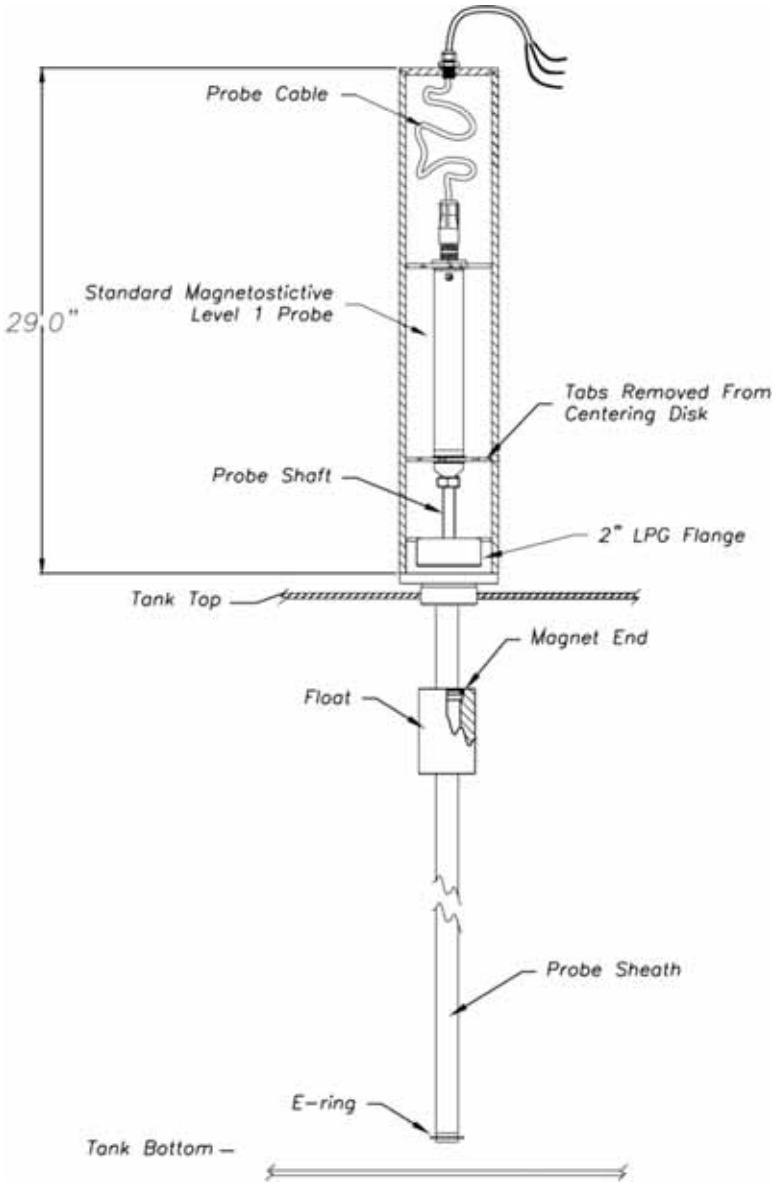

Figure 44: Probe Assembly and Installation Overview

1. Slide the float onto the bottom of the probe fixture with the magnet pointing up.
2. Place the retaining c-clip ring into the slot on the bottom of the probe fixture shaft.
3. With another person assisting you, carefully raise the probe fixture assembly and insert it into the threaded opening of the tank.

Caution

To avoid damage, use care when the float is near the threaded tank opening!

Complete steps 4 and 5 by following local regulations and tank manufactures recommendations.

4. Apply a sealant (not included) approved for LPG use to the threads of the flange.
5. Firmly tighten the flange to the LPG tank for a proper seal.

The following three steps are for 30-B-xxx probe ONLY

- Carefully slide the supplied shrink tubing over the probe outer shaft. Make sure it covers the entire probe shaft.
- Cut the tubing, leaving an extra 2.5cm (1") at the bottom of the probe.
- Carefully heat the shrink tubing using a heat gun or similar approved device until the tubing seals around the probe. Be careful to not over-heat the tubing or it will split.

Note

When shrinking the tubing at the bottom of the probe carefully bend the tubing towards the bottom of the probe to ensure that the bottom of the probe is covered.

The following step applies only to the Q0400-xxx probe

- This probe does not need the shrink tubing.

6. Go to the next step.Remove the protective cap from the open end of the probe fixture assembly.
7. Gently insert the probe into the probe fixture opening. For SiteSentinel probes, make sure the shrink tubing is not damaged during this process.
8. Be sure the probe is completely seated in the bottom of the probe fix-ture.
9. Make all electrical connections using instructions supplied with the probe. Inspect the head cover assembly BEFORE you complete the electrical connections.

The remaining steps apply to the probe head cover ONLY

The probe head must be covered. Purchase a cover from OPW, order part number 30-1512 (Figure 43 on page 105). You can cut the cover for clearance, but make sure you leave room for connections and cable (Figure 44 on page 106).

1. Insert the cable through the bushing.
2. Insert the connector end of the probe cable into the threaded hole on the top of the head cover.
3. Thread the bushing into the hole on the top of the head cover.
4. Tighten the bushing with the lower molded nut (not the top compression nut).

Caution

Do not over-tighten the nut! it isn't necessary for the bushing to be flush with the top of the head cover.

5. Pull just enough cable through the bushing so that the cable extends from the bottom of the head assembly.
6. Tighten the compression nut to seal the fitting to the cable.

This completes the LPG probe installation.

Appendix G – Probe Comparison

Model 924 and 924B Magnetostrictive Probe

Probe Comparison

Starting in October 2006, OPW Fuel Management Systems began switching from the Model 924 magnetostrictive probe to Model 924B probe**.** While taking on a new physical appearance, the Model 924B probe is fully backward compatible with all SiteSentinel family ATG consoles, as illustrated below:

- Compatible with all current SiteSentinel family ATG controllers.
- Same installation procedures, including wiring, IS barrier, floats and cable.
- Same configuration procedures
- Capable of EPA 0.1 GPH (0.36 liter per hour) and 0.2 GPH (0.76 liter per hour) leak detection
- Both certified to UL/US/Canada, ATEX, and additionally on the model 924B, IECEX

While fully backward compatible with the Model 924, the 924B is engineered with the following improvements:

- Available EPA 0.1GPH (0.38 liter per hour) leak detection now third-party certified with 2” (5 cm) diameter floats
- All stainless-steel construction (stainless probe head and probe shaft)
- Conformal-coated circuit board with 100% Surface Mount Components
- Smaller overall head diameter (1.2” [3cm] diameter) and shorter probe head (8” [20 cm] long)

Ordering the New Probe

As for order entry, the same probe length calculation is kept while changing the model/part number from 30-EAxxx to 30-Bxxx.

For example, if ordering a probe for a four-feet (122 cm) diameter tank, instead of part number 30-EA053 for a 924 probe, you should now order 30-B053. Other probe sizes, and their part number correlation, are shown in Table 21 below:

924 (Current)	Equivalent 924B (New)	Descriptions
30-EA053	30-B053	Probe for 4ft. (122 cm) Diameter/Height Tank
30-EA069	30-B069	Probe for 5ft. (152 cm) Diameter/Height Double Wall Tank
30-EA077	30-B077	Probe for 6ft. (183 cm) Diameter/Height Tank
30-EA089	30-B089	Probe for 7ft. (213 cm) Diameter/Height Tank
30-EA101	30-B101	Probe for 8ft. (244 cm) Diameter/Height Tank
30-EA105	30-B105	Probe for 8ft. (244 cm) Diameter/Height Double Wall Tank
30-EA113	30-B113	Probe for 9ft. (274 cm) Diameter/Height Tank
30-EA125	30-B125	Probe for 10ft. (305 cm) Diameter/Height Tank
30-EA137	30-B137	Probe for 11ft. (336 cm) Diameter/Height Tank
30-EA149	30-B149	Probe for 12ft. (366 cm) Diameter/Height Tank

Table 21: 924 Probe Conversion Chart

Probe Installation

- Riser: As the new 924B probe head is 1” (2.54 cm) shorter than the 924 probe, there will be slightly more installation clearance within any given riser (See Figure 45 below).

Figure 45: 924 vs. 924B probe head

- Wiring: The 924B probe must be installed using Belden 88760 cable terminating on the same cable connector at the head.
- Configuration: The configuration process remains the same as current 924A probes. For details, please refer to a SiteSentinel iTouch, 2 or 3 installation manual and/or SiteConnect software help file.

Note

- All 924B probes will be shipped out from the factory with two plastic stabilizers installed. Should there be any reason to reinstall the plastic stabilizers and the E-Clip retainers, please do the following:

1. Twist white plastic stabilizer to open it and slide it onto the top of the probe head, butting it up against the end of the probe head as shown (See Figure 46 below).

Figure 46: Top stabilizer

2. Starting at the bottom of the probe, slide on an E-Clip all the way up the probe shaft until it locates in the groove directly below the top stabilizer as shown in Figure 47 below. (You will need to push the clip past the lower two grooves on the probe head that are used to locate the second stabilizer.)

Figure 47: Top clip

3. Slide the second E-Clip up the probe shaft and locate it in the second of the two grooves found on the probe head, twist a second stabilizer onto the probe head and butt it up against the E-Clip. Finally, slide a third E-Clip up the probe shaft and locate it into the groove as shown in Figure 48 below, clamping it between the two E-Clips.

Figure 48: Lower stabilizer and clip

4. Put on the clip at the bottom of the probe head.

Appendix H - Hardware for SiteSentinel iTouch Controller Main Board

OPW Fuel Management Systems has released a new SiteSentinel iTouch Controller Main Board (0322 Board). The board is found in Series 2 SiteSentinel Model 1 ATG Consoles.

Hardware Overview

The **SiteSentinel iTouch Controller Main Board (0322)** performs the same functions as the previous SiteSentinel iTouch 0320 board, although it has several hardware differences and can support some enhanced software features when used with the latest release of SiteConnect PC software.

The new SiteSentinel iTouch board (0322) is shown in Figure 49 below:

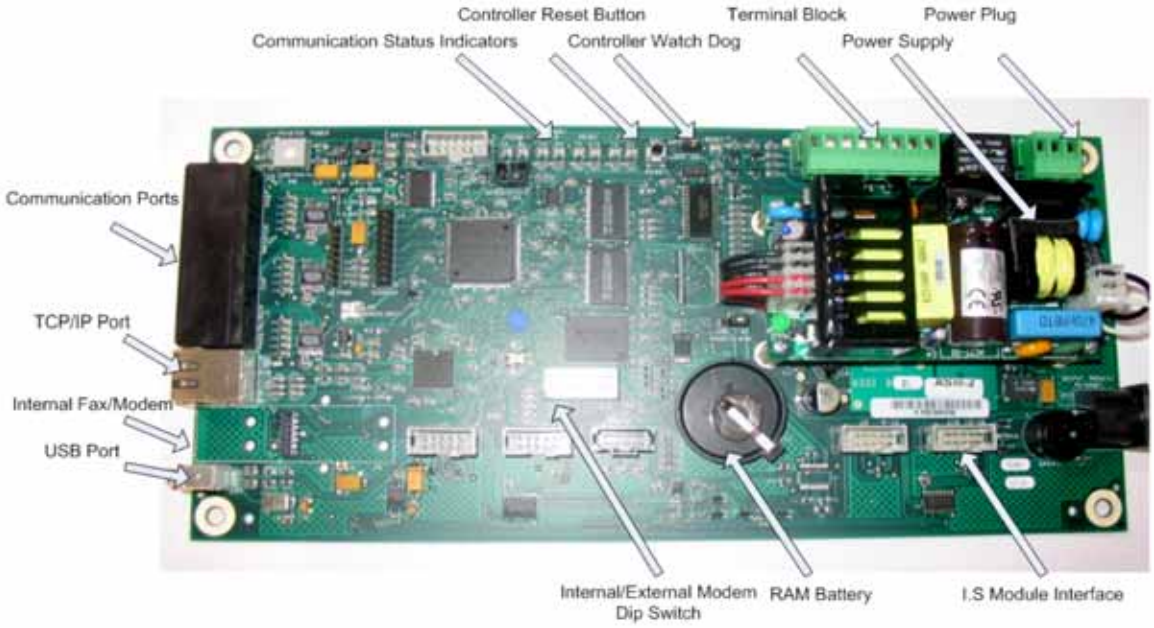

Figure 49: SS1 Board (0322)

Below is a comparison chart of the current (0320) and new (0322) SiteSentinel iTouch Main Board:

Items	SS1 0320 Board	New SS1 0322 Board
Display	Current	No Change
Keypad	Current	No Change
Enclosure & Door	Current	No Change
I.S Barrier	Current	No Change
Probe	924 A & B	924 A & B
Output Relay Module	OM4 module	No Change
Terminal Block Wiring	Current	No Change
Power Plug Wiring	Current	No Change
Option (ESN) Chips	Current	No Change
Communication Ports		
POS	Current	No Change
Printer	Current	No Change
CAP	Current	No Change
External Modem	Current	No Change
TCP/IP	External	Built-in native support
Internal Modem	Current	New (Fax/Modem)
USB	N/A	Available soon
Power Supply	Built-in	Separate
Boot Strap Code	None	New pre-programmed
Boot Loader	On removable chip	New
SS1 Application	On removable chip	New
Site Connect Version	3.0 or above	7.x or above
RAM Battery	2032	3032

Table 22: Comparison chart of the current (0320) and new (0322) SiteSentinel iTouch main board.

Hardware Detail

Communication Ports

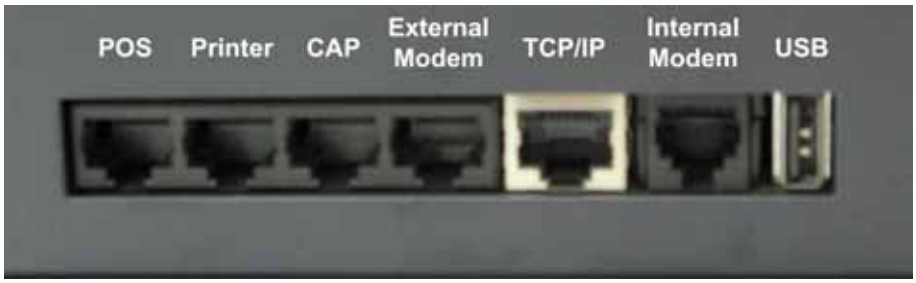

Figure 50: Communication Ports

Power Supply: Separate power supply board

Figure 51: Power Supply

Status Indicators

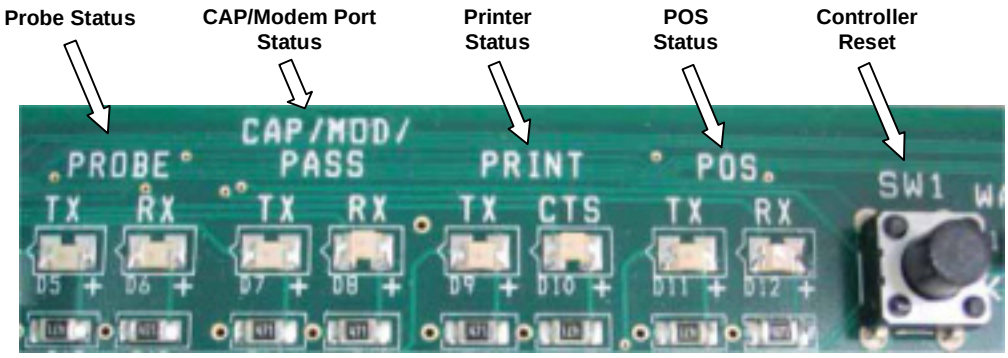

Figure 52: Status Indicators

Note: Flasing LEDs indicate certain current activities of a specific device, which follows:

RX: Receiving data

TX: Sending data

CTS: Clear to send

Dip Switch

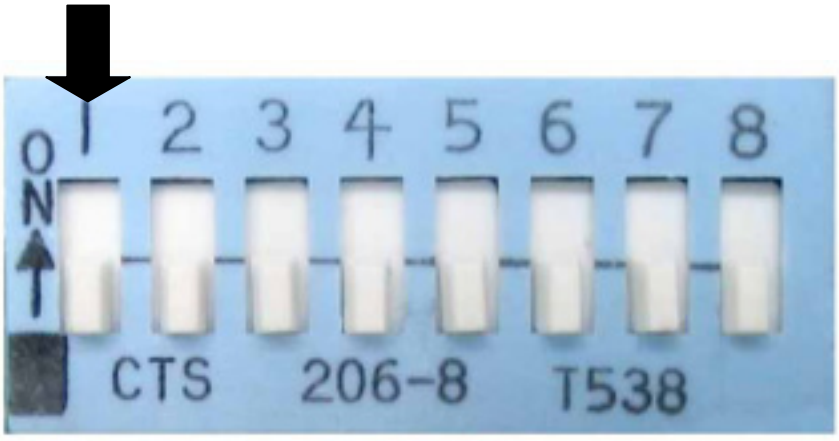

Figure 53: DIP Switch

Note: Dip Switch 1 is used for internal selection ONLY. Use the “On” position to select external modem; the “Off” is for internal modem. Once the dip switch is changed, the SiteSentinel iTouch controller needs to be restarted. Dip switch 3 is used to select display type. Use “ON” for touch screen and “OFF” for keypad.

Appendix I - EPA Certifications

Results of U.S. EPA Standard Evaluation
Automatic Tank Gauging System (ATGS)

This form tells whether the automatic tank gauging system (ATGS) described below complies with the performance requirements of the federal underground storage tank regulation. The evaluation was conducted by the equipment manufacturer or a consultant to the manufacturer according to the U.S. EPA's "Standard Test Procedure for Evaluating Leak Detection Methods: Automatic Tank Gauging Systems." The full evaluation report also includes a form describing the method and a form summarizing the test data. Tank owners using this leak detection system should keep this form on file to provide compliance with the federal regulations. Tank owners should check with State and local agencies to make sure this form satisfies their requirements.

ATGS Description

Name Site Sentinel 1, Site Sentinel II, Site Sentinel III

Version number Probe Model 924 with 2-inch Floats, 30-Minute Test

Vendor Petro Vend, Inc.

6900 Santa Fe Drive
(street address)

Hodgkins,	IL	60525	(708) 485-4200
(city)	(state)	(zip)	(phone)

COPY

Evaluation Results

This ATGS which declares tank to be leaking when the measured leak rate exceeds the threshold of 0.100 gallon per hour, has a probability of false alarms [P_{FA}] of 2.2 %.

The corresponding probability of detection [P_D] of a 0.20 gallon per hour leak is 97.8 %.

The minimum water level (threshold) in the tank that the ATGS can detect is 0.75 inch.

The minimum change in water level that can be detected by the ATGS is 0.080 inches (provided that the water level is above the threshold).

Therefore, this ATGS (**X**) does ( ) does not meet the **federal** performance standards established by the U.S. Environmental Protection Agency (0.20 gallon per hour at P_D of 95% and P_{FA} of 5%), and this ATGS (**X**) does ( ) does not meet the **federal** performance standard of measuring water in the bottom of the tank to the nearest 1/8 inch.

Test Conditions During Evaluation

The evaluation testing was conducted in a 13,700 gallon ( ) steel (X) fiberglass tank that was 120 inches in diameter and 323 inches in length.

The temperature difference between product added to fill the tank and product already in the tank ranged from -6.3 deg F to +7.5 deg F, with a standard deviation of ± 5.8 deg F.

The tests were conducted with the tank product levels 50 to 95 % full.

The product used in the evaluation was Diesel.

ATGS - Results Form Page 1 of 2

Name of ATGS Site Sentinel 1, Site Sentinel II, Site Sentinel III
Version Probe Model 924 with 2-inch Floats, 30-Minute Test

COPY

Limitations on the Results

The performance estimates above are only valid when:

- The method has not been substantially changed.
- The vendor's instructions for installing and operating the ATGS are followed.
- The tank contains a product identified on the method description form.
- The tank is no larger than 20,000 gallons.
- The depth of the product in the tank is at least 14 percent full.[1]
- The waiting time after adding any substantial amount of product to the tank is 8 hours.
- The temperature of the added product does not differ more than ± 8.7 degrees Fahrenheit from that already in the tank.
- The total data collection time for the test is at least 30 minutes.
- Other limitations specified by the vendor of determined during testing:

  None

> **Safety disclaimer: This test procedure only addresses the issue of the ATG system's ability to detect leaks. It does not test the equipment for safety hazards.**

Certification of Results

I certify that the ATGS was installed and operated according to the vendor's instructions and that the results presented on this form are those obtained during the evaluation. I also certify that the evaluation was performed according to one of the following:

(X) standard EPA test procedure for ATGS
( ) alternative EPA test procedure for ATGS

H. Kendall Wilcox, President
(printed name)

H. Kendall Wilcox
(signature)

November 6, 2000
(date)

Ken Wilcox Associates, Inc.
(organization performing evaluation)

Grain Valley, Missouri 64029
(city, state. zip)

(816) 443-2494
(phone number)

[1] The lowest temperature sensor on the Petro Vend probe is located 10% from the bottom of the probe. The procedures for determining the minimum product level limitation are specified in a letter from the ATGS and VTTT Committees of the NWGLDE to Gauge Vendors and other interested parties, April 28, 1997.

Results of U.S. EPA Standard Evaluation
Automatic Tank Gauging System (ATGS)

This form tells whether the automatic tank gauging system (ATGS) described below complies with the performance requirements of the federal underground storage tank regulation. The evaluation was conducted by the equipment manufacturer or a consultant to the manufacturer according to the U.S. EPA's "Standard Test Procedure for Evaluating Leak Detection Methods: Automatic Tank Gauging Systems." The full evaluation report also includes a form describing the method and a form summarizing the test data. Tank owners using this leak detection system should keep this form on file to provide compliance with the federal regulations. Tank owners should check with State and local agencies to make sure this form satisfies their requirements.

ATGS Description

COPY

Name Site Sentinel 1, Site Sentinel II, Site Sentinel III

Version number Probe Model 924 with 2-inch Floats, 1-Hour Test

Vendor Petro Vend, Inc.

6900 Santa Fe Drive
(street address)

Hodgkins,	IL	60525	(708) 485-4200
(city)	(state)	(zip)	(phone)

Evaluation Results

This ATGS which declares tank to be leaking when the measured leak rate exceeds the threshold of 0.100 gallon per hour, has a probability of false alarms [P_{FA}] of 0.6 %.

The corresponding probability of detection [P_D] of a 0.20 gallon per hour leak is 99.4 %.

The minimum water level (threshold) in the tank that the ATGS can detect is 0.75 inch.

The minimum change in water level that can be detected by the ATGS is 0.080 inches (provided that the water level is above the threshold).

Therefore, this ATGS (X) does ( ) does not meet the **federal** performance standards established by the U.S. Environmental Protection Agency (0.20 gallon per hour at P_D of 95% and P_{FA} of 5%), and this ATGS (X) does ( ) does not meet the **federal** performance standard of measuring water in the bottom of the tank to the nearest 1/8 inch.

Test Conditions During Evaluation

The evaluation testing was conducted in a 13,700 gallon ( ) steel (X) fiberglass tank that was 120 inches in diameter and 323 inches in length.

The temperature difference between product added to fill the tank and product already in the tank ranged from -6.3 deg F to +7.5 deg F, with a standard deviation of ± 5.8 deg F.

The tests were conducted with the tank product levels 50 to 95 % full.

The product used in the evaluation was Diesel .

ATGS - Results Form

Page 1 of 2

Name of ATGS Site Sentinel 1, Site Sentinel II, Site Sentinel III
Version Probe Model 924 with 2-inch Floats, 1-Hour Test

COPY

Limitations on the Results

The performance estimates above are only valid when:

- The method has not been substantially changed.
- The vendor's instructions for installing and operating the ATGS are followed.
- The tank contains a product identified on the method description form.
- The tank is no larger than 20,000 gallons.
- The depth of the product in the tank is at least 50 percent full.
- The waiting time after adding any substantial amount of product to the tank is 8 hours.
- The temperature of the added product does not differ more than ± 8.7 degrees Fahrenheit from that already in the tank.
- The total data collection time for the test is at least 1 hour.
- Other limitations specified by the vendor of determined during testing:

  None

> **Safety disclaimer: This test procedure only addresses the issue of the ATG system's ability to detect leaks. It does not test the equipment for safety hazards.**

Certification of Results

I certify that the ATGS was installed and operated according to the vendor's instructions and that the results presented on this form are those obtained during the evaluation. I also certify that the evaluation was performed according to one of the following:

(X) standard EPA test procedure for ATGS
( ) alternative EPA test procedure for ATGS

H. Kendall Wilcox, President
(printed name)

H. Kendall Wilcox
(signature)

November 6, 2000
(date)

Ken Wilcox Associates, Inc.
(organization performing evaluation)

Grain Valley, Missouri 64029
(city, state. zip)

(816) 443-2494
(phone number)

Results of U.S. EPA Standard Evaluation
Automatic Tank Gauging System (ATGS)

This form tells whether the automatic tank gauging system (ATGS) described below complies with the performance requirements of the federal underground storage tank regulation. The evaluation was conducted by the equipment manufacturer or a consultant to the manufacturer according to the U.S. EPA's "Standard Test Procedure for Evaluating Leak Detection Methods: Automatic Tank Gauging Systems." The full evaluation report also includes a form describing the method and a form summarizing the test data. Tank owners using this leak detection system should keep this form on file to provide compliance with the federal regulations. Tank owners should check with State and local agencies to make sure this form satisfies their requirements.

ATGS Description

COPY

Name Site Sentinel 1, Site Sentinel II, Site Sentinel III

Version number Probe Model 924 with 2-inch Floats, 2-Hour Test

Vendor Petro Vend, Inc.

6900 Santa Fe Drive
(street address)

Hodgkins,	IL	60525	(708) 485-4200
(city)	(state)	(zip)	(phone)

Evaluation Results

This ATGS which declares tank to be leaking when the measured leak rate exceeds the threshold of 0.100 gallon per hour, has a probability of false alarms [P_{FA}] of 0.3 %.

The corresponding probability of detection [P_D] of a 0.20 gallon per hour leak is 99.7 %.

The minimum water level (threshold) in the tank that the ATGS can detect is 0.75 inch.

The minimum change in water level that can be detected by the ATGS is 0.080 inches (provided that the water level is above the threshold).

Therefore, this ATGS (**X**) does ( ) does not meet the **federal** performance standards established by the U.S. Environmental Protection Agency (0.20 gallon per hour at P_D of 95% and P_{FA} of 5%), and this ATGS (**X**) does ( ) does not meet the **federal** performance standard of measuring water in the bottom of the tank to the nearest 1/8 inch.

Test Conditions During Evaluation

The evaluation testing was conducted in a 13,700 gallon ( ) steel (X) fiberglass tank that was 120 inches in diameter and 323 inches in length.

The temperature difference between product added to fill the tank and product already in the tank ranged from -6.3 deg F to +7.5 deg F, with a standard deviation of ± 5.8 deg F.

The tests were conducted with the tank product levels 50 to 95 % full.

The product used in the evaluation was Diesel.

ATGS - Results Form

Page 1 of 2

Name of ATGS Site Sentinel 1, Site Sentinel II, Site Sentinel III
Version Probe Model 924 with 2-inch Floats, 2-Hour Test

COPY

Limitations on the Results

The performance estimates above are only valid when:

- The method has not been substantially changed.
- The vendor's instructions for installing and operating the ATGS are followed.
- The tank contains a product identified on the method description form.
- The tank is no larger than 20,000 gallons.
- The depth of the product in the tank is at least 14 percent full.[1]
- The waiting time after adding any substantial amount of product to the tank is 8 hours.
- The temperature of the added product does not differ more than ± 8.7 degrees Fahrenheit from that already in the tank.
- The total data collection time for the test is at least 2 hours.
- Other limitations specified by the vendor of determined during testing:

  None

> **Safety disclaimer: This test procedure only addresses the issue of the ATG system's ability to detect leaks. It does not test the equipment for safety hazards.**

Certification of Results

I certify that the ATGS was installed and operated according to the vendor's instructions and that the results presented on this form are those obtained during the evaluation. I also certify that the evaluation was performed according to one of the following:

(X) standard EPA test procedure for ATGS
( ) alternative EPA test procedure for ATGS

H. Kendall Wilcox, President
(printed name)

H. Kendall Wilcox
(signature)

November 6, 2000
(date)

Ken Wilcox Associates, Inc.
(organization performing evaluation)

Grain Valley, Missouri 64029
(city, state. zip)

(816) 443-2494
(phone number)

[1] The lowest temperature sensor on the Petro Vend probe is located 10% from the bottom of the probe. The procedures for determining the minimum product level limitation are specified in a letter from the ATGS and VTTT Committees of the NWGLDE to Gauge Vendors and other interested parties. April 28, 1997.

ATGS - Results Form

Page 2 of 2

Results of U.S. EPA Standard Evaluation
Automatic Tank Gauging System (ATGS)

This form tells whether the automatic tank gauging system (ATGS) described below complies with the performance requirements of the federal underground storage tank regulation. The evaluation was conducted by the equipment manufacturer or a consultant to the manufacturer according to the U.S. EPA's "Standard Test Procedure for Evaluating Leak Detection Methods: Automatic Tank Gauging Systems." The full evaluation report also includes a form describing the method and a form summarizing the test data. Tank owners using this leak detection system should keep this form on file to provide compliance with the federal regulations. Tank owners should check with State and local agencies to make sure this form satisfies their requirements.

ATGS Description

COPY

Name Site Sentinel 1, Site Sentinel II, Site Sentinel III

Version number Probe Model 924 with 2-inch Floats, 3-Hour Test

Vendor Petro Vend, Inc.

6900 Santa Fe Drive
(street address)

Hodgkins,	IL	60525	(708) 485-4200
(city)	(state)	(zip)	(phone)

Evaluation Results

This ATGS which declares tank to be leaking when the measured leak rate exceeds the threshold of 0.100 gallon per hour, has a probability of false alarms [P_{FA}] of 0.1 %.

The corresponding probability of detection [P_D] of a 0.20 gallon per hour leak is 99.9 %.

The minimum water level (threshold) in the tank that the ATGS can detect is 0.75 inch.

The minimum change in water level that can be detected by the ATGS is 0.080 inches (provided that the water level is above the threshold).

Therefore, this ATGS (**X**) does ( ) does not meet the **federal** performance standards established by the U.S. Environmental Protection Agency (0.20 gallon per hour at P_D of 95% and P_{FA} of 5%), and this ATGS (**X**) does ( ) does not meet the **federal** performance standard of measuring water in the bottom of the tank to the nearest 1/8 inch.

Test Conditions During Evaluation

The evaluation testing was conducted in a 13,700 gallon ( ) steel (X) fiberglass tank that was 120 inches in diameter and 323 inches in length.

The temperature difference between product added to fill the tank and product already in the tank ranged from -6.3 deg F to +7.5 deg F, with a standard deviation of ± 5.8 deg F.

The tests were conducted with the tank product levels 50 to 95 % full.

The product used in the evaluation was Diesel .

ATGS - Results Form

Page 1 of 2

Name of ATGS Site Sentinel 1, Site Sentinel II, Site Sentinel III
Version Probe Model 924 with 2-inch Floats, 3-Hour Test

COPY

Limitations on the Results

The performance estimates above are only valid when:

- The method has not been substantially changed.
- The vendor's instructions for installing and operating the ATGS are followed.
- The tank contains a product identified on the method description form.
- The tank is no larger than 20,000 gallons.
- The depth of the product in the tank is at least 14 percent full.[1]
- The waiting time after adding any substantial amount of product to the tank is 8 hours.
- The temperature of the added product does not differ more than ± 8.7 degrees Fahrenheit from that already in the tank.
- The total data collection time for the test is at least 3 hours.
- Other limitations specified by the vendor of determined during testing:

  None

> **Safety disclaimer: This test procedure only addresses the issue of the ATG system's ability to detect leaks. It does not test the equipment for safety hazards.**

Certification of Results

I certify that the ATGS was installed and operated according to the vendor's instructions and that the results presented on this form are those obtained during the evaluation. I also certify that the evaluation was performed according to one of the following:

(X) standard EPA test procedure for ATGS
( ) alternative EPA test procedure for ATGS

H. Kendall Wilcox, President
(printed name)

Ken Wilcox Associates, Inc.
(organization performing evaluation)

H. Kendall Wilcox
(signature)

Grain Valley, Missouri 64029
(city, state, zip)

November 6, 2000
(date)

(816) 443-2494
(phone number)

[1] The lowest temperature sensor on the Petro Vend probe is located 10% from the bottom of the probe. The procedures for determining the minimum product level limitation are specified in a letter from the ATGS and VTTT Committees of the NWGLDE to Gauge Vendors and other interested parties, April 28, 1997.

Results of U.S. EPA Standard Evaluation
Automatic Tank Gauging System (ATGS)

This form tells whether the automatic tank gauging system (ATGS) described below complies with the performance requirements of the federal underground storage tank regulation. The evaluation was conducted by the equipment manufacturer or a consultant to the manufacturer according to the U.S. EPA's "Standard Test Procedure for Evaluating Leak Detection Methods: Automatic Tank Gauging Systems." The full evaluation report also includes a form describing the method and a form summarizing the test data. Tank owners using this leak detection system should keep this form on file to provide compliance with the federal regulations. Tank owners should check with State and local agencies to make sure this form satisfies their requirements.

ATGS Description

Name Site Sentinel 1, Site Sentinel II, Site Sentinel III

Version number Probe Model 924 with 4-inch Floats, 30-Minute Test

Vendor Petro Vend, Inc.

6900 Santa Fe Drive
(street address)

Hodgkins,	IL	60525	(708) 485-4200
(city)	(state)	(zip)	(phone)

COPY

Evaluation Results

This ATGS which declares tank to be leaking when the measured leak rate exceeds the threshold of 0.100 gallon per hour, has a probability of false alarms [P_{FA}] of 2.2 %.

The corresponding probability of detection [P_D] of a 0.20 gallon per hour leak is 97.8 %.

The minimum water level (threshold) in the tank that the ATGS can detect is 0.85 inch.

The minimum change in water level that can be detected by the ATGS is 0.0432 inches (provided that the water level is above the threshold).

Therefore, this ATGS (**X**) does ( ) does not meet the **federal** performance standards established by the U.S. Environmental Protection Agency (0.20 gallon per hour at P_D of 95% and P_{FA} of 5%), and this ATGS (**X**) does ( ) does not meet the **federal** performance standard of measuring water in the bottom of the tank to the nearest 1/8 inch.

Test Conditions During Evaluation

The evaluation testing was conducted in a 13,700 gallon ( ) steel (X) fiberglass tank that was 120 inches in diameter and 323 inches in length.

The temperature difference between product added to fill the tank and product already in the tank ranged from -6.3 deg F to +7.5 deg F, with a standard deviation of ± 5.8 deg F.

The tests were conducted with the tank product levels 50 to 95 % full.

The product used in the evaluation was Diesel .

ATGS - Results Form

Page 1 of 2

Name of ATGS Site Sentinel 1, Site Sentinel II, Site Sentinel III
Version Probe Model 924 with 4-inch Floats, 30-Minute Test

Limitations on the Results

The performance estimates above are only valid when:

- The method has not been substantially changed.
- The vendor's instructions for installing and operating the ATGS are followed.
- The tank contains a product identified on the method description form.
- The tank is no larger than 20,000 gallons.
- The depth of the product in the tank is at least 14 percent full.[1]
- The waiting time after adding any substantial amount of product to the tank is 8 hours.
- The temperature of the added product does not differ more than ± 8.7 degrees Fahrenheit from that already in the tank.
- The total data collection time for the test is at least 30 minutes.
- Other limitations specified by the vendor of determined during testing:

  None

> **Safety disclaimer: This test procedure only addresses the issue of the ATG system's ability to detect leaks. It does not test the equipment for safety hazards.**

COPY

Certification of Results

I certify that the ATGS was installed and operated according to the vendor's instructions and that the results presented on this form are those obtained during the evaluation. I also certify that the evaluation was performed according to one of the following:

(X) standard EPA test procedure for ATGS
( ) alternative EPA test procedure for ATGS

H. Kendall Wilcox, President
(printed name)

Ken Wilcox Associates, Inc.
(organization performing evaluation)

H. Kendall Wilcox
(signature)

Grain Valley, Missouri 64029
(city, state, zip)

November 3, 2000
(date)

(816) 443-2494
(phone number)

[1] The lowest temperature sensor on the Petro Vend probe is located 10% from the bottom of the probe. The procedures for determining the minimum product level limitation are specified in a letter from the ATGS and VTTT Committees of the NWGLDE to Gauge Vendors and other interested parties, April 28, 1997.

Results of U.S. EPA Standard Evaluation
Automatic Tank Gauging System (ATGS)

This form tells whether the automatic tank gauging system (ATGS) described below complies with the performance requirements of the federal underground storage tank regulation. The evaluation was conducted by the equipment manufacturer or a consultant to the manufacturer according to the U.S. EPA's "Standard Test Procedure for Evaluating Leak Detection Methods: Automatic Tank Gauging Systems." The full evaluation report also includes a form describing the method and a form summarizing the test data. Tank owners using this leak detection system should keep this form on file to provide compliance with the federal regulations. Tank owners should check with State and local agencies to make sure this form satisfies their requirements.

ATGS Description

Name Site Sentinel 1, Site Sentinel II, Site Sentinel III

Version number Probe Model 924 with 4-inch Floats, 1-Hour Test

Vendor Petro Vend, Inc.

6900 Santa Fe Drive
(street address)

Hodgkins,	IL	60525	(708) 485-4200
(city)	(state)	(zip)	(phone)

COPY

Evaluation Results

This ATGS which declares tank to be leaking when the measured leak rate exceeds the threshold of 0.100 gallon per hour, has a probability of false alarms [P_{FA}] of 1.1 %.

The corresponding probability of detection [P_D] of a 0.20 gallon per hour leak is 98.9 %.

The minimum water level (threshold) in the tank that the ATGS can detect is 0.85 inch.

The minimum change in water level that can be detected by the ATGS is 0.0432 inches (provided that the water level is above the threshold).

Therefore, this ATGS (X) does ( ) does not meet the **federal** performance standards established by the U.S. Environmental Protection Agency (0.20 gallon per hour at P_D of 95% and P_{FA} of 5%), and this ATGS (X) does ( ) does not meet the **federal** performance standard of measuring water in the bottom of the tank to the nearest 1/8 inch.

Test Conditions During Evaluation

The evaluation testing was conducted in a 13,700 gallon ( ) steel (X) fiberglass tank that was 120 inches in diameter and 323 inches in length.

The temperature difference between product added to fill the tank and product already in the tank ranged from -6.3 deg F to +7.5 deg F, with a standard deviation of ± 5.8 deg F.

The tests were conducted with the tank product levels 50 to 95 % full.

The product used in the evaluation was Diesel.

ATGS - Results Form

Page 1 of 2

Name of ATGS Site Sentinel 1, Site Sentinel II, Site Sentinel III
Version Probe Model 924 with 4-inch Floats, 1-Hour Test

COPY

Limitations on the Results

The performance estimates above are only valid when:

- The method has not been substantially changed.
- The vendor's instructions for installing and operating the ATGS are followed.
- The tank contains a product identified on the method description form.
- The tank is no larger than 20,000 gallons.
- The depth of the product in the tank is at least 14 percent full.[1]
- The waiting time after adding any substantial amount of product to the tank is 8 hours.
- The temperature of the added product does not differ more than ± 8.7 degrees Fahrenheit from that already in the tank.
- The total data collection time for the test is at least 1 hour.
- Other limitations specified by the vendor of determined during testing:

  None

> **Safety disclaimer: This test procedure only addresses the issue of the ATG system's ability to detect leaks. It does not test the equipment for safety hazards.**

Certification of Results

I certify that the ATGS was installed and operated according to the vendor's instructions and that the results presented on this form are those obtained during the evaluation. I also certify that the evaluation was performed according to one of the following:

(X) standard EPA test procedure for ATGS
( ) alternative EPA test procedure for ATGS

H. Kendall Wilcox, President
(printed name)

Ken Wilcox Associates, Inc.
(organization performing evaluation)

H. Kendall Wilcox
(signature)

Grain Valley, Missouri 64029
(city, state. zip)

November 3, 2000
(date)

(816) 443-2494
(phone number)

[1] The lowest temperature sensor on the Petro Vend probe is located 10% from the bottom of the probe. The procedures for determining the minimum product level limitation are specified in a letter from the ATGS and VTTT Committees of the NWGLDE to Gauge Vendors and other interested parties, April 28, 1997.

Results of U.S. EPA Standard Evaluation
Automatic Tank Gauging System (ATGS)

This form tells whether the automatic tank gauging system (ATGS) described below complies with the performance requirements of the federal underground storage tank regulation. The evaluation was conducted by the equipment manufacturer or a consultant to the manufacturer according to the U.S. EPA's "Standard Test Procedure for Evaluating Leak Detection Methods: Automatic Tank Gauging Systems." The full evaluation report also includes a form describing the method and a form summarizing the test data. Tank owners using this leak detection system should keep this form on file to provide compliance with the federal regulations. Tank owners should check with State and local agencies to make sure this form satisfies their requirements.

ATGS Description

Name Site Sentinel 1, Site Sentinel II, Site Sentinel III

Version number Probe Model 924 with 4-inch Floats, 2-Hour Test

Vendor Petro Vend, Inc.

6900 Santa Fe Drive
(street address)

Hodgkins,	IL	60525	(708) 485-4200
(city)	(state)	(zip)	(phone)

COPY

Evaluation Results

This ATGS which declares tank to be leaking when the measured leak rate exceeds the threshold of 0.100 gallon per hour, has a probability of false alarms [P_{FA}] of 0.7 %.

The corresponding probability of detection [P_D] of a 0.20 gallon per hour leak is 99.3 %.

The minimum water level (threshold) in the tank that the ATGS can detect is 0.85 inch.

The minimum change in water level that can be detected by the ATGS is 0.0432 inches (provided that the water level is above the threshold).

Therefore, this ATGS (X) does ( ) does not meet the **federal** performance standards established by the U.S. Environmental Protection Agency (0.20 gallon per hour at P_D of 95% and P_{FA} of 5%), and this ATGS (X) does ( ) does not meet the **federal** performance standard of measuring water in the bottom of the tank to the nearest 1/8 inch.

Test Conditions During Evaluation

The evaluation testing was conducted in a 13,700 gallon ( ) steel (X) fiberglass tank that was 120 inches in diameter and 323 inches in length.

The temperature difference between product added to fill the tank and product already in the tank ranged from -6.3 deg F to +7.5 deg F, with a standard deviation of ± 5.8 deg F.

The tests were conducted with the tank product levels 50 to 95 % full.

The product used in the evaluation was Diesel .

ATGS - Results Form

Page 1 of 2

Name of ATGS Site Sentinel 1, Site Sentinel II, Site Sentinel III
Version Probe Model 924 with 4-inch Floats, 2-Hour Test

COPY

Limitations on the Results

The performance estimates above are only valid when:

- The method has not been substantially changed.
- The vendor's instructions for installing and operating the ATGS are followed.
- The tank contains a product identified on the method description form.
- The tank is no larger than 20,000 gallons.
- The depth of the product in the tank is at least 14 percent full.[1]
- The waiting time after adding any substantial amount of product to the tank is 8 hours.
- The temperature of the added product does not differ more than ± 8.7 degrees Fahrenheit from that already in the tank.
- The total data collection time for the test is at least 2 hours.
- Other limitations specified by the vendor of determined during testing:

  None

> **Safety disclaimer: This test procedure only addresses the issue of the ATG system's ability to detect leaks. It does not test the equipment for safety hazards.**

Certification of Results

I certify that the ATGS was installed and operated according to the vendor's instructions and that the results presented on this form are those obtained during the evaluation. I also certify that the evaluation was performed according to one of the following:

(X) standard EPA test procedure for ATGS
( ) alternative EPA test procedure for ATGS

H. Kendall Wilcox, President
(printed name)

Ken Wilcox Associates, Inc.
(organization performing evaluation)

H. Kendall Wilcox

(signature)

Grain Valley, Missouri 64029
(city, state. zip)

November 3, 2000
(date)

(816) 443-2494
(phone number)

[1] The lowest temperature sensor on the Petro Vend probe is located 10% from the bottom of the probe. The procedures for determining the minimum product level limitation are specified in a letter from the ATGS and VTTT Committees of the NWGLDE to Gauge Vendors and other interested parties, April 28, 1997.

COPY

Results of U.S. EPA Standard Evaluation
Automatic Tank Gauging System (ATGS)

This form tells whether the automatic tank gauging system (ATGS) described below complies with the performance requirements of the federal underground storage tank regulation. The evaluation was conducted by the equipment manufacturer or a consultant to the manufacturer according to the U.S. EPA's "Standard Test Procedure for Evaluating Leak Detection Methods: Automatic Tank Gauging Systems." The full evaluation report also includes a form describing the method and a form summarizing the test data. Tank owners using this leak detection system should keep this form on file to provide compliance with the federal regulations. Tank owners should check with State and local agencies to make sure this form satisfies their requirements.

ATGS Description

Name Site Sentinel 1, Site Sentinel II, Site Sentinel III

Version number Probe Model 924 with 4-inch Floats, 3-Hour Test

Vendor Petro Vend, Inc.

6900 Santa Fe Drive
(street address)

Hodgkins,	IL	60525	(708) 485-4200
(city)	(state)	(zip)	(phone)

Evaluation Results

This ATGS which declares tank to be leaking when the measured leak rate exceeds the threshold of 0.100 gallon per hour, has a probability of false alarms [P_{FA}] of 0.5 %.

The corresponding probability of detection [P_D] of a 0.20 gallon per hour leak is 99.5 %.

The minimum water level (threshold) in the tank that the ATGS can detect is 0.85 inch.

The minimum change in water level that can be detected by the ATGS is 0.0432 inches (provided that the water level is above the threshold).

Therefore, this ATGS (**X**) does ( ) does not meet the **federal** performance standards established by the U.S. Environmental Protection Agency (0.20 gallon per hour at P_D of 95% and P_{FA} of 5%), and this ATGS (**X**) does ( ) does not meet the **federal** performance standard of measuring water in the bottom of the tank to the nearest 1/8 inch.

Test Conditions During Evaluation

The evaluation testing was conducted in a 13,700 gallon ( ) steel (X) fiberglass tank that was 120 inches in diameter and 323 inches in length.

The temperature difference between product added to fill the tank and product already in the tank ranged from -6.3 deg F to +7.5 deg F, with a standard deviation of ± 5.8 deg F.

The tests were conducted with the tank product levels 50 to 95 % full.

The product used in the evaluation was Diesel.

ATGS - Results Form

Page 1 of 2

Name of ATGS Site Sentinel 1, Site Sentinel II, Site Sentinel III
Version Probe Model 924 with 4-inch Floats, 3-Hour Test

Limitations on the Results

COPY

The performance estimates above are only valid when:

- The method has not been substantially changed.
- The vendor's instructions for installing and operating the ATGS are followed.
- The tank contains a product identified on the method description form.
- The tank is no larger than 20,000 gallons.
- The depth of the product in the tank is at least 14 percent full.[1]
- The waiting time after adding any substantial amount of product to the tank is 8 hours.
- The temperature of the added product does not differ more than ± 8.7 degrees Fahrenheit from that already in the tank.
- The total data collection time for the test is at least 3 hours.
- Other limitations specified by the vendor of determined during testing:

  None

> **Safety disclaimer: This test procedure only addresses the issue of the ATG system's ability to detect leaks. It does not test the equipment for safety hazards.**

Certification of Results

I certify that the ATGS was installed and operated according to the vendor's instructions and that the results presented on this form are those obtained during the evaluation. I also certify that the evaluation was performed according to one of the following:

(X) standard EPA test procedure for ATGS
( ) alternative EPA test procedure for ATGS

H. Kendall Wilcox, President
(printed name)

Ken Wilcox Associates, Inc.
(organization performing evaluation)

H. Kendall Wilcox
(signature)

Grain Valley, Missouri 64029
(city, state, zip)

November 3, 2000
(date)

(816) 443-2494
(phone number)

[1] The lowest temperature sensor on the Petro Vend probe is located 10% from the bottom of the probe. The procedures for determining the minimum product level limitation are specified in a letter from the ATGS and VTTT Committees of the NWGLDE to Gauge Vendors and other interested parties, April 28, 1997.

Results of U.S. EPA Standard Evaluation
Volumetric Tank Tightness Testing Method

This form tells whether the tank tightness testing method described below complies with the performance requirements of the federal underground storage tank regulation. The evaluation was conducted by the equipment manufacturer or a consultant to the manufacturer according to the U.S. EPA's "Standard Test Procedure for Evaluating Leak Detection Methods: Volumetric Tank Tightness Testing Methods." The full evaluation report also includes a form describing the method and a form summarizing the test data.

Tank owners using this leak detection system should keep this form on file to provide compliance with the federal regulations. Tank owners should check with State and local agencies to make sure this form satisfies their requirements.

Method Description

COPY

Name Site Sentinel 1, Site Sentinel II, Site Sentinel III

Version Probe Model 924 with 4-inch Floats, 2-Hour Test

Vendor Petro Vend, Inc.

6900 Santa Fe Drive
(street address)

Hodgkins,	IL	60525	(708) 485-4200
(city)	(state)	(zip)	(phone)

Evaluation Results

This Method which declares tank to be leaking when the measured leak rate exceeds the threshold of 0.053 gallon per hour, has a probability of false alarms [P_{FA}] of 1.9 %.

The corresponding probability of detection [P_D] of a 0.10 gallon per hour leak is 96.9 %.

Therefore, this Method (X) does ( ) does not meet the **federal** performance standards established by the U.S. Environmental Protection Agency (0.10 gallon per hour at P_D of 95% and P_{FA} of 5%).

Test Conditions During Evaluation

The evaluation testing was conducted in a 13,700 gallon ( ) steel (X) fiberglass tank that was 120 inches in diameter and 323 inches in length.

The tests were conducted with the tank 90 to 95 percent full.

The temperature difference between product added to fill the tank and product already in the tank ranged from -5.8 deg F to +7.9 deg F, with a standard deviation of ± 5.2 deg F.

The product used in the evaluation was diesel .

COPY

Volumetric TTT Method Site Sentinel 1, Site Sentinel II, Site Sentinel III
Version Probe Model 924 with 4-inch Floats, 2-Hour Test

Limitations on the Results

The performance estimates above are only valid when:

- The method has not been substantially changed.
- The vendor's instructions for using the method are followed.
- The tank is no larger than 20,000 gallons.
- The tank contains a product identified on the method description form.
- The tank is at least 90 percent full.
- The waiting time after adding any substantial amount of product to the tank is at least 12 hours.
- The temperature of the added product does not differ more than ± 7.9 degrees Fahrenheit from that already in the tank.
- The waiting time between the end of topping off, if any, and the start of the test data collection is at least N/A hours.
- The total data collection time for the test is at least 2 hours.
- Large vapor pockets are identified and removed (for methods that overfill the tank).
- This method (X) can ( ) cannot be used if the ground-water level is above the bottom of the tank.
- Other limitations specified by the vendor of determined during testing:

  None

> **Safety disclaimer: This test procedure only addresses the issue of the methods ability to detect leaks. It does not test the equipment for safety hazards.**

Certification of Results

I certify that the volumetric tank tightness testing method was operated according to the vendor's instructions. I also certify that the evaluation was performed according to the standard EPA test procedure for volumetric tank tightness testing methods and that the results presented above are those obtained during the evaluation.

H. Kendall Wilcox, President
(printed name)

H. Kendall Wilcox
(signature)

October 12, 2000
(date)

Ken Wilcox Associates, Inc.
(organization performing evaluation)

Grain Valley, Missouri 64029
(city, state, zip)

(816) 443-2494
(phone number)

Results of U.S. EPA Standard Evaluation
Volumetric Tank Tightness Testing Method

This form tells whether the tank tightness testing method described below complies with the performance requirements of the federal underground storage tank regulation. The evaluation was conducted by the equipment manufacturer or a consultant to the manufacturer according to the U.S. EPA's "Standard Test Procedure for Evaluating Leak Detection Methods: Volumetric Tank Tightness Testing Methods." The full evaluation report also includes a form describing the method and a form summarizing the test data.

Tank owners using this leak detection system should keep this form on file to provide compliance with the federal regulations. Tank owners should check with State and local agencies to make sure this form satisfies their requirements.

Method Description

Name Site Sentinel 1, Site Sentinel II, Site Sentinel III

Version Probe Model 924 with 4-inch Floats, 3-Hour Test

Vendor Petro Vend, Inc.

6900 Santa Fe Drive
(street address)

Hodgkins,	IL	60525	(708) 485-4200
(city)	(state)	(zip)	(phone)

COPY

Evaluation Results

This Method which declares tank to be leaking when the measured leak rate exceeds the threshold of 0.05 gallon per hour, has a probability of false alarms [P_{FA}] of 1.0 %.

The corresponding probability of detection [P_D] of a 0.10 gallon per hour leak is 98.2 %.

Therefore, this Method (X) does ( ) does not meet the **federal** performance standards established by the U.S. Environmental Protection Agency (0.10 gallon per hour at P_D of 95% and P_{FA} of 5%).

Test Conditions During Evaluation

The evaluation testing was conducted in a 13,700 gallon ( ) steel (X) fiberglass tank that was 120 inches in diameter and 323 inches in length.

The tests were conducted with the tank 90 to 95 percent full.

The temperature difference between product added to fill the tank and product already in the tank ranged from -5.8 deg F to +7.9 deg F, with a standard deviation of ± 5.2 deg F.

The product used in the evaluation was diesel .

Volumetric TTT Method Site Sentinel 1, Site Sentinel II, Site Sentinel III
Version Probe Model 924 with 4-inch Floats, 3-Hour Test

COPY

Limitations on the Results

The performance estimates above are only valid when:

- The method has not been substantially changed.
- The vendor's instructions for using the method are followed.
- The tank is no larger than 20,000 gallons.
- The tank contains a product identified on the method description form.
- The tank is at least 90 percent full.
- The waiting time after adding any substantial amount of product to the tank is at least 12 hours.
- The temperature of the added product does not differ more than ± 7.9 degrees Fahrenheit from that already in the tank.
- The waiting time between the end of topping off, if any, and the start of the test data collection is at least N/A hours.
- The total data collection time for the test is at least 3 hours.
- Large vapor pockets are identified and removed (for methods that overfill the tank).
- This method (X) can ( ) cannot be used if the ground-water level is above the bottom of the tank.
- Other limitations specified by the vendor of determined during testing:

  None

> **Safety disclaimer: This test procedure only addresses the issue of the methods ability to detect leaks. It does not test the equipment for safety hazards.**

Certification of Results

I certify that the volumetric tank tightness testing method was operated according to the vendor's instructions. I also certify that the evaluation was performed according to the standard EPA test procedure for volumetric tank tightness testing methods and that the results presented above are those obtained during the evaluation.

H. Kendall Wilcox, President
(printed name)

H. Kendall Wilcox
(signature)

October 12, 2000
(date)

Ken Wilcox Associates, Inc.
(organization performing evaluation)

Grain Valley, Missouri 64029
(city, state, zip)

(816) 443-2494
(phone number)

OPW FUEL MANAGEMENT SYSTEMS
A DOVER COMPANY

ONE COMPANY.
ONE WORLD.
ONE SOURCE.

DECLARATION OF CONFORMITY

In accordance with ATEX Directive 94/9/EC, Annexes IV and VII Equipment intended for use in potentially explosive atmospheres.

Standard (s) to which conformity is declared:	EN 50014: 1997 +Amds 1 & 2 EN 50020: 2002 EN 50284: 1999
Manufacturers Name:	OPW Fuel Management Systems, Inc.
Manufacturers Address:	6900 Santa Fe Drive Hodgkins, IL. 60525 USA
Type of Equipment:	Integrated Tank Monitoring System
Model:	SiteSentinel 1 (Controller/924 Probe)
Notified Body:	Baseefa (2001) Ltd. Notified Body Number 1180 Buxton, Derbyshire UK
EC Type Certificates:	Baseefa03ATEX0348X Dated: 30 June 2003 Baseefa03ATEX0349X Dated: 30 June 2003

The following additional European standards have been applied.
EN 60950 + A1: 1993 + A2: 1993 + A3: 1995 + A4: 1996

I, the undersigned, hereby declare that the equipment specified above conforms to the above Directive (s) and Standard (s).

Place: Hodgkins, IL.

Date: 22 December 2004

John G. Petrovich
Compliance Coordinator

6900 SANTA FE DRIVE • HODGKINS, IL USA 60525 • www.opwfms.com • 708-485-4200 • (fax) 708-485-7137

European Compliance

DEVICE	AGENCY	STANDARDS	MARKING	CERTIFICATE NUMBER
Model 924 Probe	BASEEFA	EN 50014 (1997) + Amds 1 & 2 EN 50020 (2002) EN 50284: 1999	Ex II (1) G EEx ia IIA T4	BASEEFA03ATEX0349X (See below for Conditions of Safe Use)
Model 4323 Intrinsically Safe Module	BASEEFA	EN 50014 (1997) + Amds 1 & 2 EN 50020 (2002)	Ex II (1) G [EEx ia] IIA	BASEEFA03ATEX0348X (See below for Conditions of Safe Use)

BASEEFA03ATEX0349X Conditions of Safe Use:

1.) The apparatus enclosure may contain light metals. The apparatus must be installed in such a manner as to eliminate the risk of impact or friction with other metal surfaces.
2.) Items of the apparatus are made of plastic. The apparatus must not be installed in a position where it may be subjected to an excessive air/fluid flow or be subjected to rubbing that may cause an electrostatic build-up.

BASEEFA03ATEX0348X Conditions of Safe Use:

1.) When installed, the terminals must be afforded a degree of protection of at least IP20.

Alarm Kit....8, 95, 96, 102
Battery, internal backup....13, 93
CAP port....93
Certifications....17
Circuit breaker....19
Circuit breaker conduit....22
Codes, regulatory....12
Combo sensor
  Description....77, 82
Compliance....26
ConduitSee....22
Controller
  Mounting dimensions....19
  Mounting location for....19
  Power supply conduit....22
  Power supply wiring....23
Controller Installation....19
Dimensions....14
Drilling holes....19
Dual-level reservoir sensor
  Description....61
Enraf POS....97
External alarm wiring....22
External Modem....92
Floats
  Product groups for....36
Ground wire....23
Hazardous area....15, 19
Hydrocarbon liquid sensor
  Description....45
Hydrocarbon liquid sump sensor
  Installation....53
Hydrocarbon liquid/water sensor
  Description....49
Hydrocarbon vapor sensor
  Description....69
I.S. (Intrinsically Safe) Interface Module
  Defined....16
Internal modem....92
Interstitial Hydrocarbon sensor
  Description....41
Interstitial level sensors
  Description....58, 62
Interstitial optical liquid sensor
  Description....73
Junction Boxes....29
Leak test
  As pre-installation step....13
Manholes....30
Maximum ratings....22
Modems....92
Mounting Location....19
Offset for tank tilt....32
Operating temperature rating....14
Phone Line....92
Physical dimensions....14
POS interface option....93
Power Supply....22
  Terminal block....23
  Wiring....23
Precision leak test....31
Printer
  Bracket for....21
  Specifications....15
  Speed of printing for....91
Probe
  Cable....39
  Head....39
  Lengths of....18
  Placement....31
  Prepping equipment for....26
  Specifications....16
  Temperature sensors on....16
  Wiring....40
Probe and Sensor Installation....26
Probe and Sensor Wiring....26
Probe, Model 613....31
Product Density....36
Product groups....36
Redundant ground....23
Remote Alarm Output....14
Riser cap....39
Safety....12
Seal-offs....28
Sensor
  Combo Single Level/Hydrocarbon Liquid Sump....77
  Hydrocarbon Liquid/Water....49
  Hydrocarbon Vapor....69
  Interstitial....73
Shielded wiring....27

Single-level sump sensor
Description 57
SiteConnect software 93
Splicing wires 26
Tanks
Leak testing of 13
Temperature 17
Controller ratings 14
Sensors in probes 16
Three-conductor cable 38
Underground tank 30
Warnings 12
Windows 93

OPW Fuel Management Systems
6900 Santa Fe Drive
Hodgkins, IL 60525
708-485-4200